REINFORCED EMBANKMENTS on SOFT FOUNDATIONS

Training Lecture 1

Bob Holtz, PhD, PE, D.GE
Professor Emeritus
University of Washington
Seattle, USA

Geotechnical Frontiers 2017
Orlando, Florida USA

Handout notes for this session

<u>Chapter 7</u>: Reinforced Embankments on Soft Foundations…(60 pp)

from Holtz, R. D., Christopher, B. R., and Berg, R. R. (2008) *Geosynthetic Design and Construction Guidelines*, U.S. Federal Highway Administration, National Highway Institute, Washington, D. C., Publication No. FHWA-NHI-07-092, 592 pp.

[Available as a pdf download *free* from the FHWA website/publications]

+ pdf copies of my slides…

Publication No. FHWA
NHI-07-092

August 2008

NHI Course No. 132013

Geosynthetic Design & Construction Guidelines

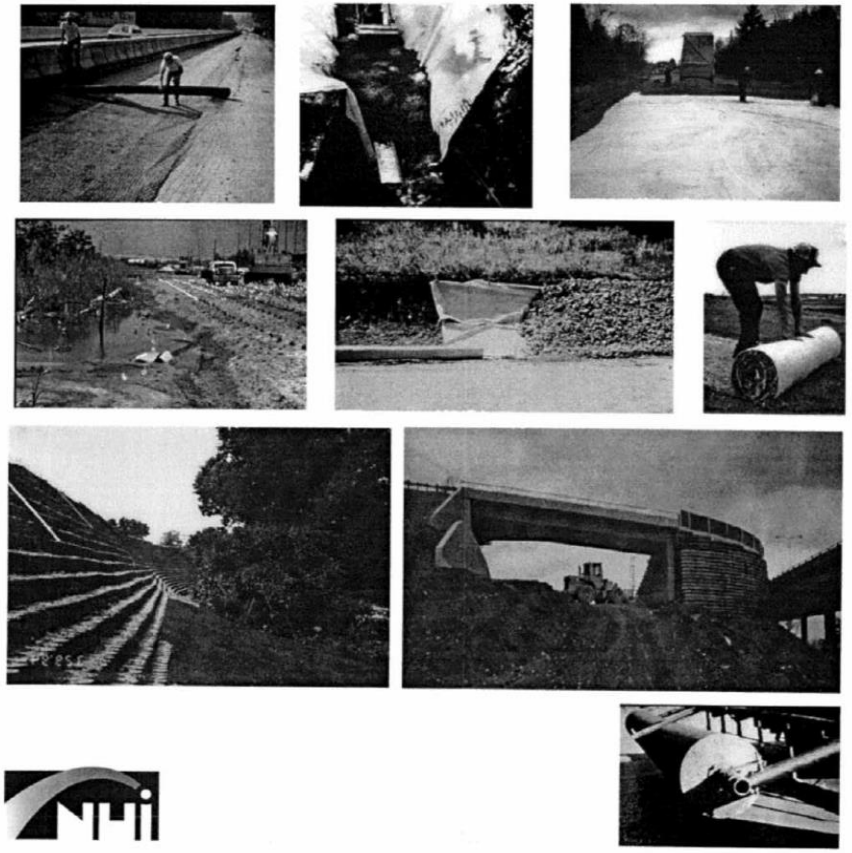

+

7.0 REINFORCED EMBANKMENTS ON SOFT FOUNDATIONS

What we will do this session…

1. Conventional solutions to embankments on very soft foundations; geosynthetics applications, case histories; etc.
2. Design (concepts and design details)
3. Material properties (soils; geosynthetics)
4. Construction procedures for geosynthetic reinforced embankments

Soft foundations

Soft foundations

Historical methods of construction

Upstate NY, 1927

Bangkok-Siracha highway, 1972

Conventional Solutions

- Elevated structure
- Berms and/or flatter slopes
- Lightweight fill
- Embankment piles
- Excavation/displacement and replacement
- Preload/surcharge w/ or w/o drains
- Chemical, electrical, thermal, etc.
- Vibro-replacement (stone columns, etc.)
- Reinforcement *(usually geosynthetics)*

Applications of geosynthetic reinforced embankments

- OVER SOFT FOUNDATION SOILS
  - New embankments
  - Embankment widening
  - Temporary construction access roads
- OVER LOCAL ANOMALIES
  - Potential sinkholes (karstic limestone; underground mines, etc.)

New embankments

Embankment widening

Purpose of reinforcement

- ***Prevent instability ****
- ***Prevent excessive vertical/horizontal deformation***

****Most important…***

Geosynthetics used in embankments on soft foundations applications

- GEOTEXTILES
- GEOGRIDS
- PVDs ("wick drains") – for foundation soil improvement

DESIGN WITH GEOSYNTHETICS???

Case Histories

…and lessons learned

Corps of Engineers,
Swan Is., Miss.

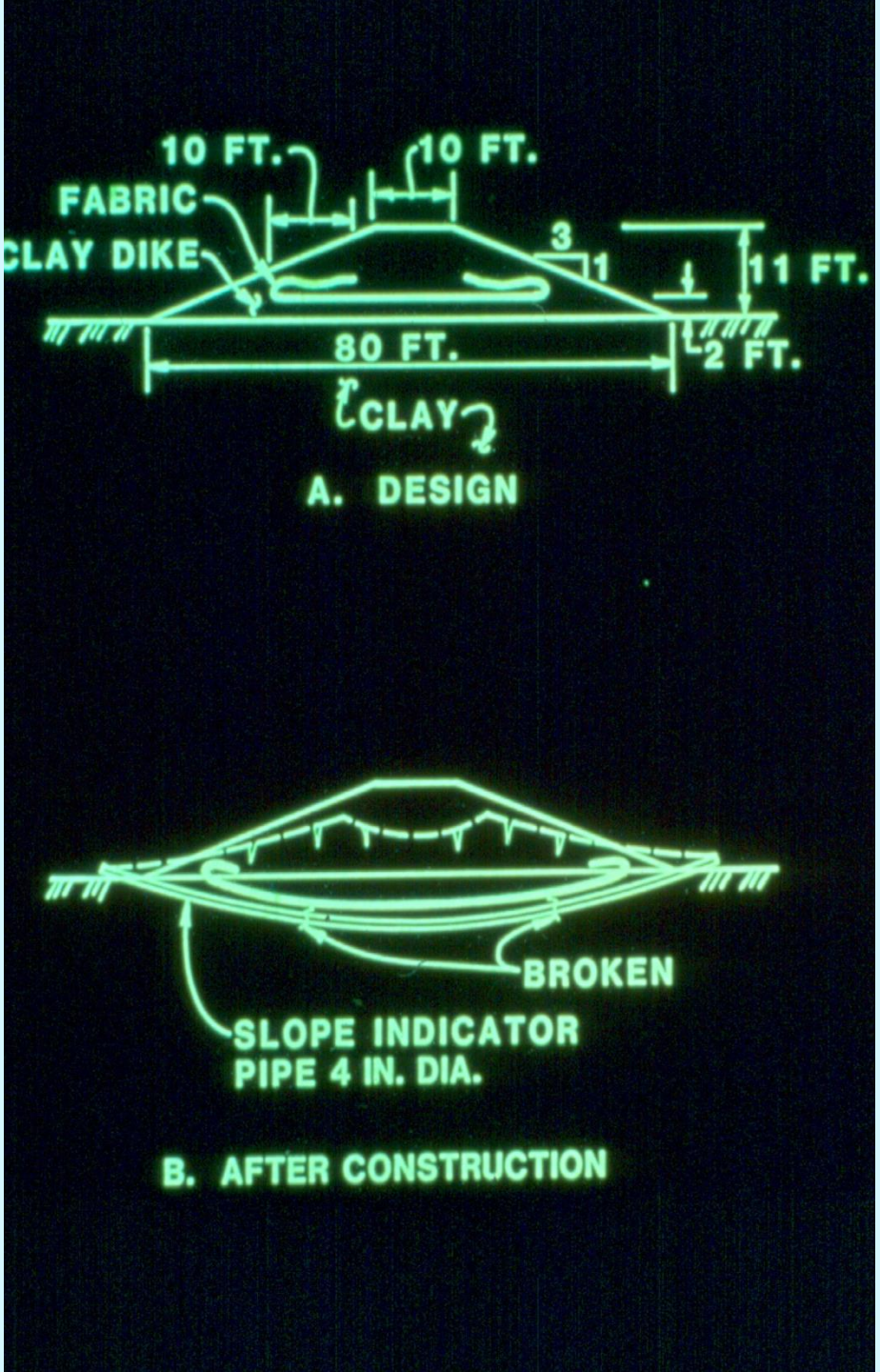
10 FT.
10 FT.
FABRIC
CLAY DIKE
3
1
11 FT.
80 FT.
2 FT.
CLAY
A. DESIGN
BROKEN
SLOPE INDICATOR
PIPE 4 IN. DIA.
B. AFTER CONSTRUCTION

Lesson?

Virginia Dept of Highways & Transportation

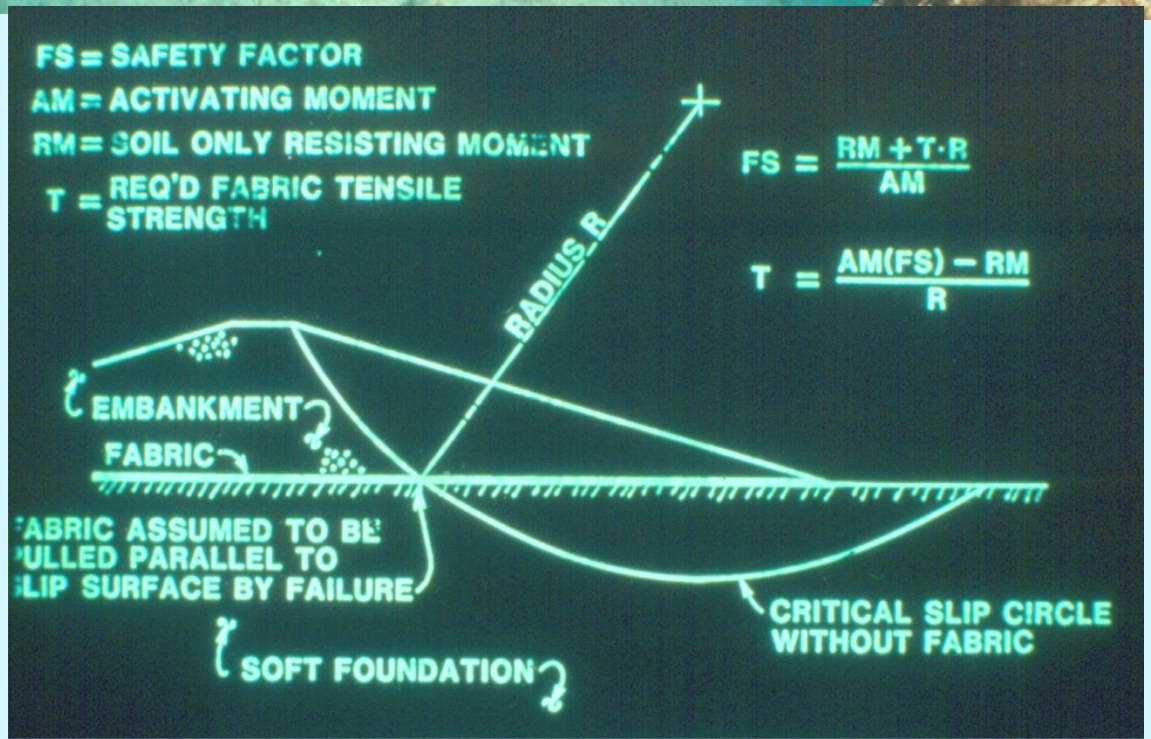
FS = SAFETY FACTOR
AM = ACTIVATING MOMENT
RM = SOIL ONLY RESISTING MOMENT
T = REQ'D FABRIC TENSILE STRENGTH
FS = (RM + T·R) / AM
T = (AM(FS) − RM) / R
RADIUS R
EMBANKMENT
FABRIC
FABRIC ASSUMED TO BE PULLED PARALLEL TO SLIP SURFACE BY FAILURE
CRITICAL SLIP CIRCLE WITHOUT FABRIC
SOFT FOUNDATION

Lesson?

Corps of Engineers,

New Brunswick, Ga.

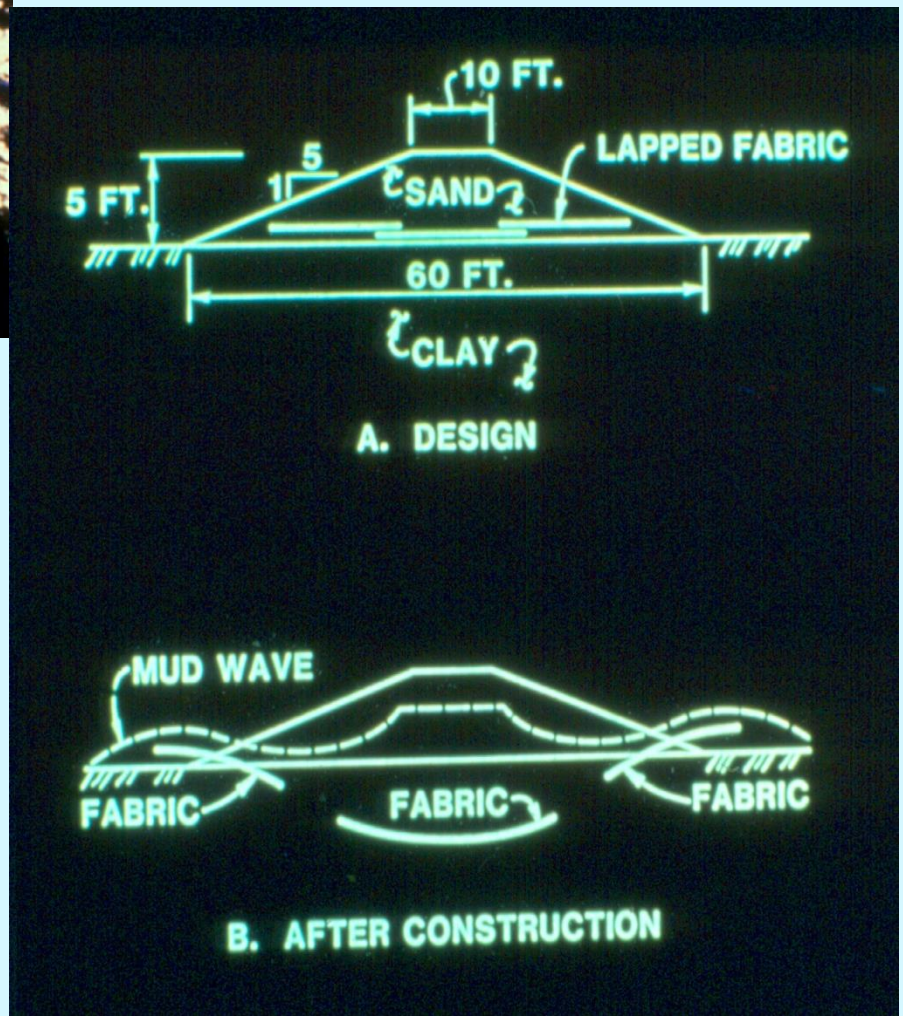
10 FT.
LAPPED FABRIC
5
1
5 FT.
SAND
60 FT.
CLAY
A. DESIGN
MUD WAVE
FABRIC
FABRIC
FABRIC
B. AFTER CONSTRUCTION

Lesson?

Hong Kong

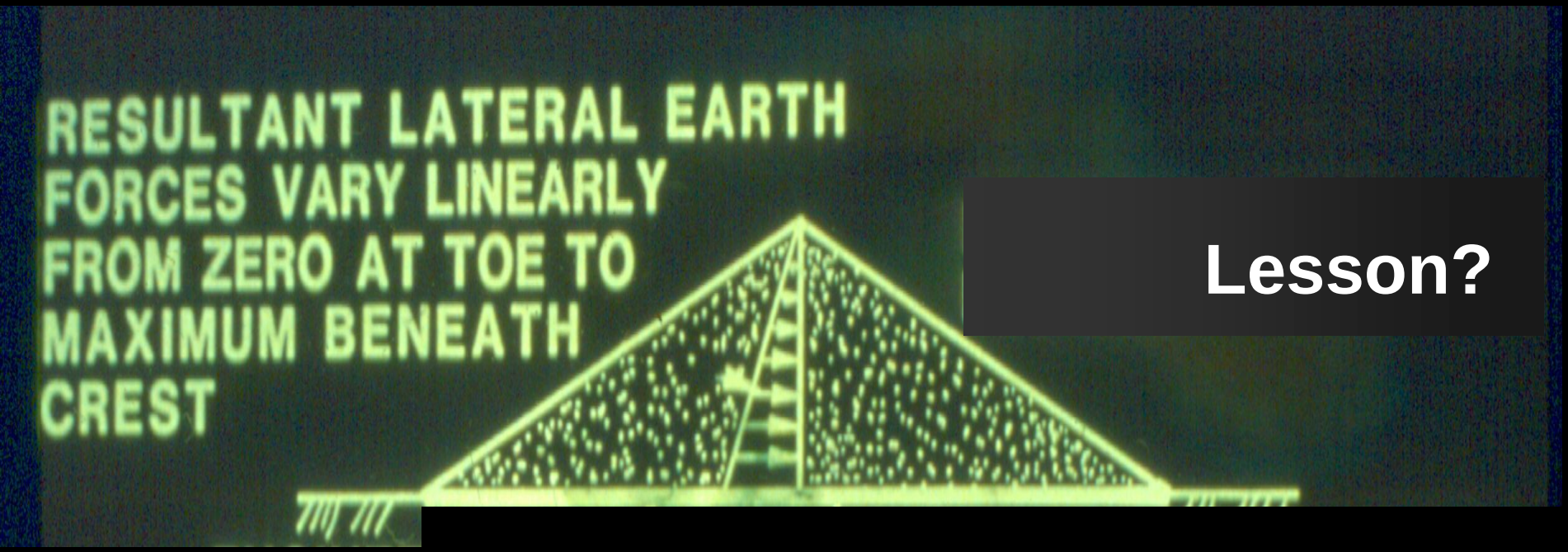
RESULTANT LATERAL EARTH
FORCES VARY LINEARLY
FROM ZERO AT TOE TO
MAXIMUM BENEATH
CREST

Lesson?

Construction techniques and designs (theoretical and empirical) are based on work by US Army Corps of Engineers

1. ***Pinto Pass, Mobile Bay, Alabama***
2. ***Craney Island, Virginia***

USA Corps of Engineers, Dredged sediment retention dike, Pinto Pass, Mobile Harbor, Alabama (1978-81) -- **($\tau_f \sim 3$ kPa)**

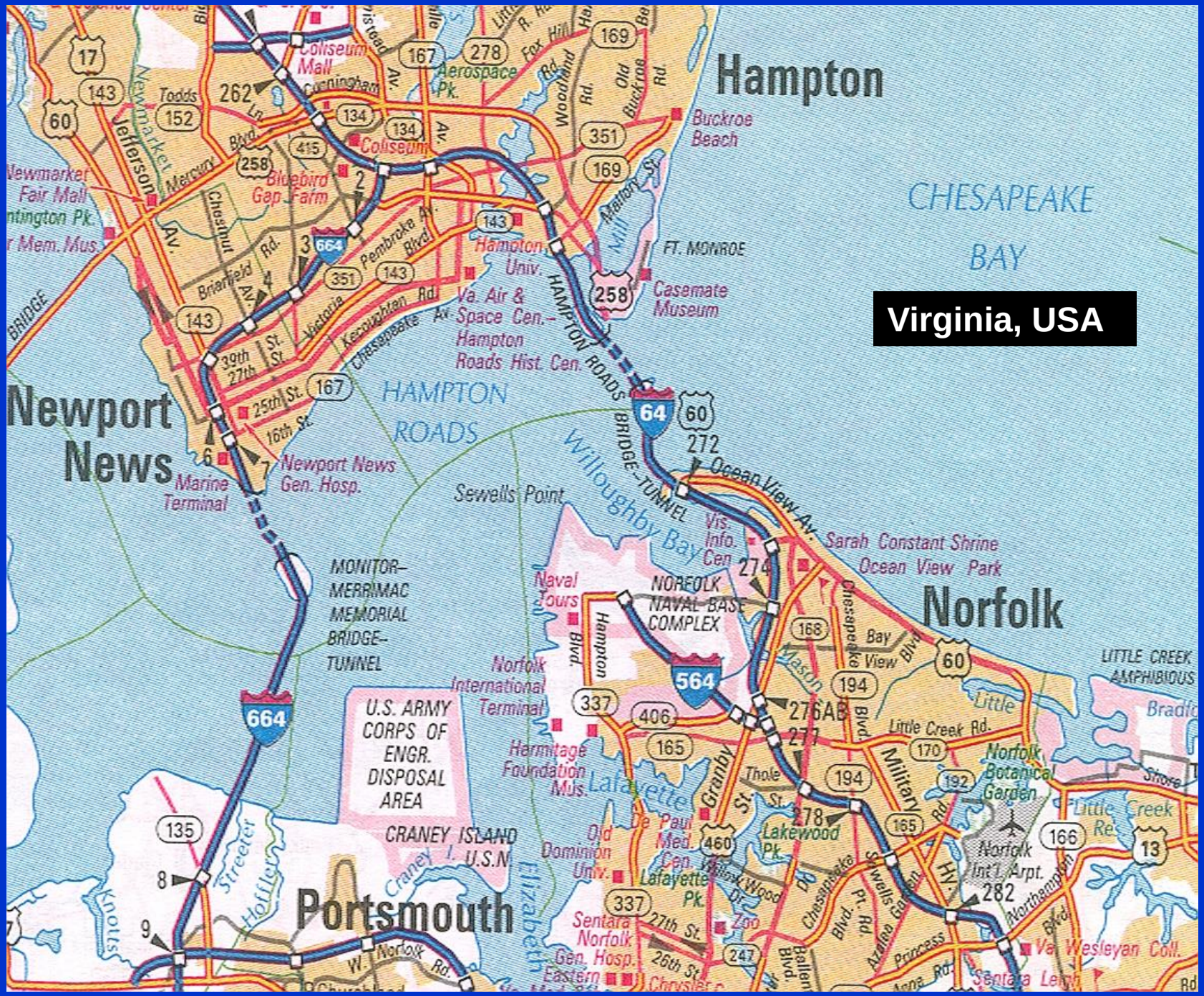
Virginia, USA
Hampton
Newport News
Norfolk
Portsmouth
CHESAPEAKE BAY
HAMPTON ROADS
Willoughby Bay
Sewells Point
Coliseum Mall
Coliseum
Aerospace Pk.
Buckroe Beach
Newmarket Fair Mall
Bluebird Gap Farm
Hampton Univ.
FT. MONROE
Casemate Museum
Va. Air & Space Cen.–Hampton Roads Hist. Cen.
HAMPTON ROADS BRIDGE–TUNNEL
Newport News Gen. Hosp.
Marine Terminal
MONITOR–MERRIMAC MEMORIAL BRIDGE–TUNNEL
U.S. ARMY CORPS OF ENGR. DISPOSAL AREA
CRANEY ISLAND
Naval Tours
NORFOLK NAVAL BASE COMPLEX
Norfolk International Terminal
Hermitage Foundation Mus.
Old Dominion Univ.
De Paul Med. Cen.
Lafayette Pk.
Lakewood Pk.
Zoo
Sentara Norfolk Gen. Hosp.
Eastern
Vis. Info. Cen
Ocean View Av.
Sarah Constant Shrine
Ocean View Park
Norfolk Botanical Garden
Norfolk Int'l. Arpt.
LITTLE CREEK AMPHIBIOUS
Va. Wesleyan Coll.
Sentara Leigh
Buckroe Beach
Mill Point
Mason Creek
Lafayette
Elizabeth
Knotts
Streeter
Hotlles
Newmarket
Jefferson
Mercury
Chestnut
Briarfield
Pembroke
Victoria
Kecoughtan
Chesapeake
Woodland
Old Buckroe
Fox Hill
Mellon St.
Cunningham
Todds
Little Creek Rd.
Military Hy.
Granby St.
Hampton Blvd.
Chesapeake Blvd.
Sewells Point Rd.
Azalea Garden
Princess Anne Rd.
Northampton Blvd.
Bay View Blvd.
Thole St.
Willow Wood Dr.
Ballentine Blvd.
Norfolk Av.
Chesapeake Av.
Victoria Av.
Pembroke Av.
Mercury Blvd.
Jefferson Av.
Newmarket Av.
Cunningham Dr.
Coliseum Av.
Woodland Rd.
Old Buckroe Rd.
Fox Hill Rd.
Mellon St.
Little Creek Rd.
Bay View Blvd.
Hampton Blvd.
Granby St.
Thole St.
Military Hy.
Chesapeake Blvd.
Sewells Point Rd.
Azalea Garden
Princess Anne Rd.
Northampton Blvd

Lesson?

? ? ? ? ? ? ? ? ? ? ?

QUESTIONS

? ? ? ? ? ? ? ? ? ? ?

DESIGN

Note:

- ***Soft ground stability: NOT the same as roadway subgrade stabilization.***
- ***Consider: DL vs. LL***

Reinforced embankments – ultimate limit states:

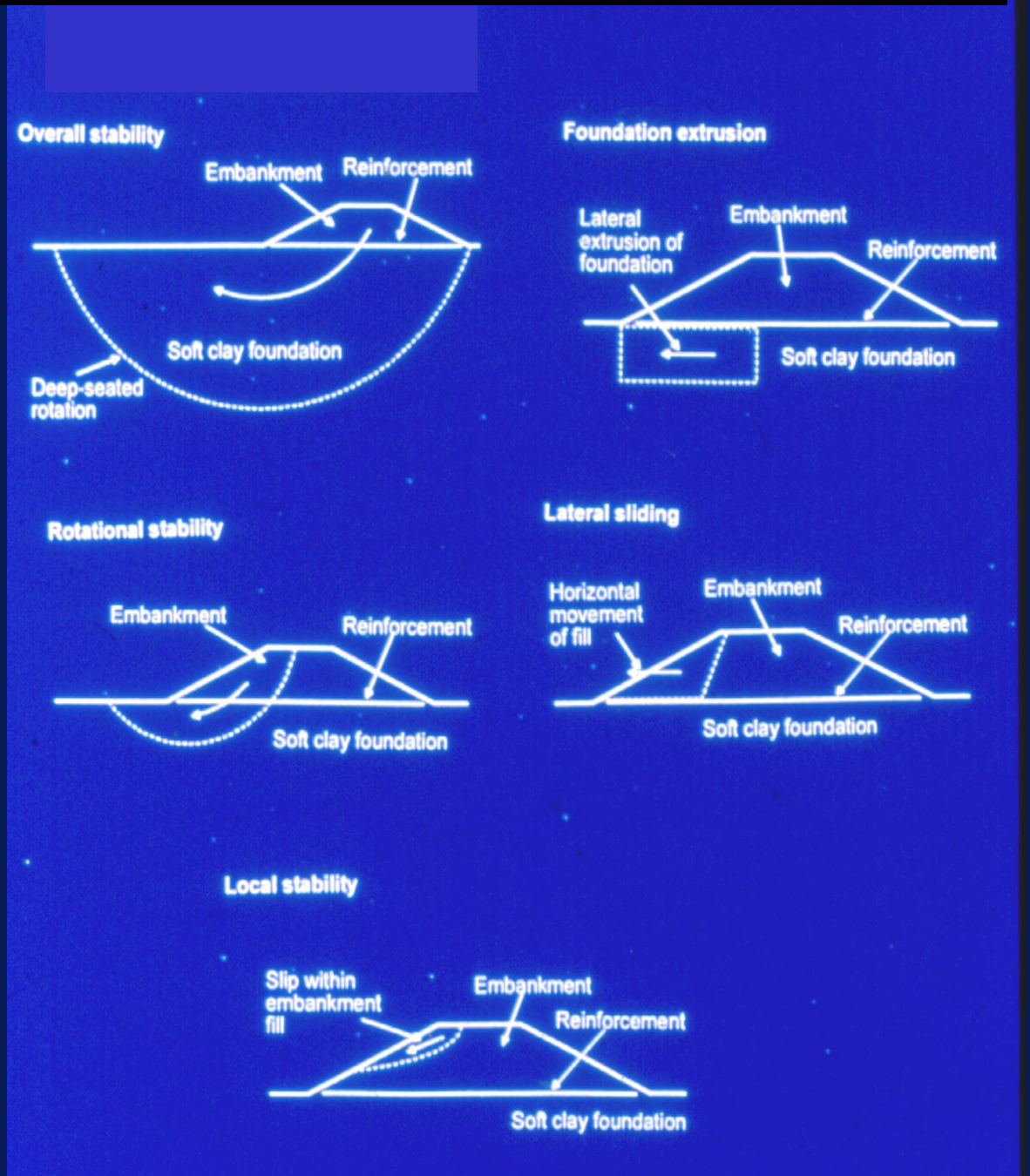

Lawson (1996)

Reinforced embankments – serviceability limit states:

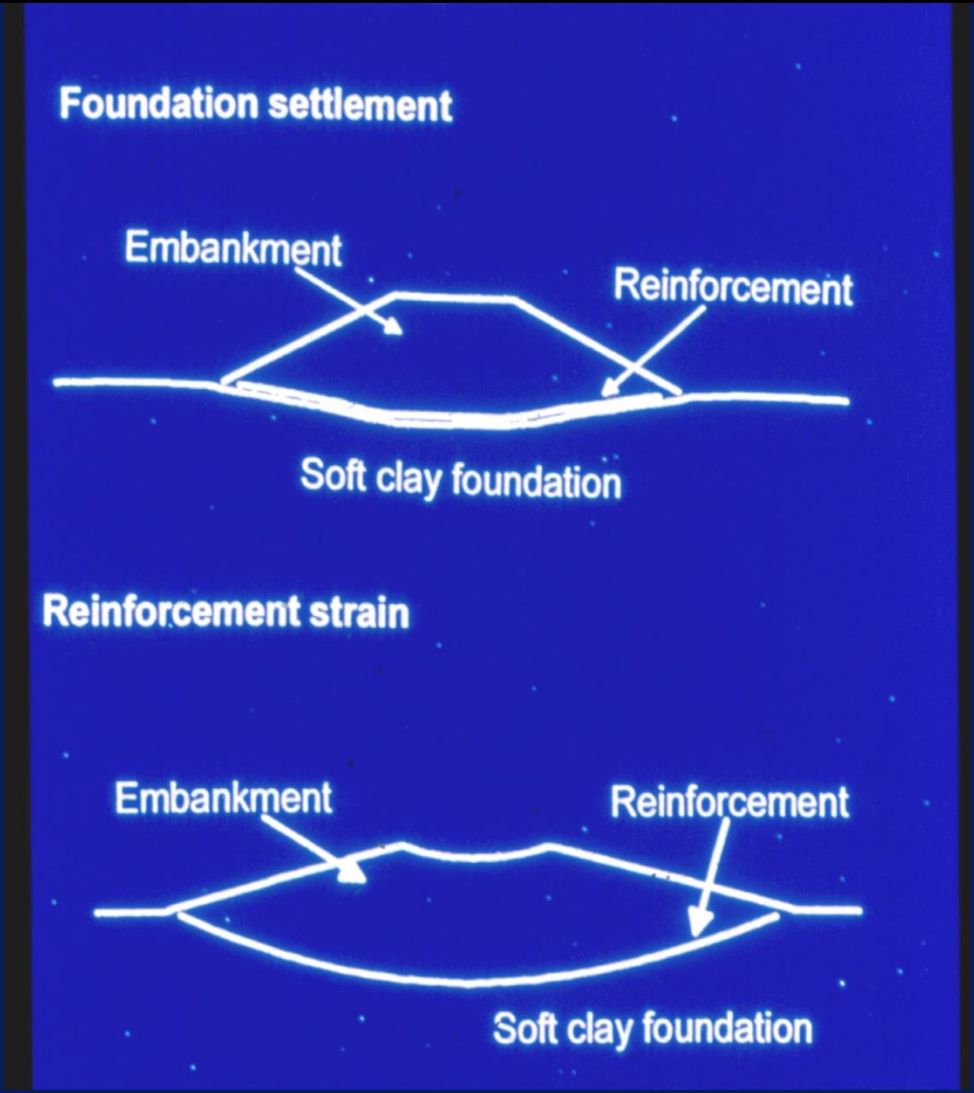

Lawson (1996)

Design steps -- Sect. 7.3-2 & 7.3-3*

1. Dimensions/loading
2. Foundation soil profile & properties
3. Fill properties
4. FS & settlement requirements
5. Bearing capacity
6. Rotational stability
7. Lateral spreading
8. Tolerable deformation & modulus
9. Longitudinal strength requirements
10. Geosynthetic properties
11. Estimate settlement magnitude & rate
12. Construction sequence
13. Observation requirements
14. Preconstruction meetings
15. Observe construction

*Sect. 7.3-2: "Cook book"
Sect. 7.3-3: Commentary

Stability analyses for reinforced embankments

5. *Overall bearing capacity*
6. *Rotational stability*
7. *Lateral spreading*
8. *Tolerable deformation & modulus*
9. *Longitudinal strength requirements*
10. *Geosynthetic properties*
11. *Settlement magnitude & rate*

---

5 - 9: Ultimate Limit States

11: Serviceability Limits

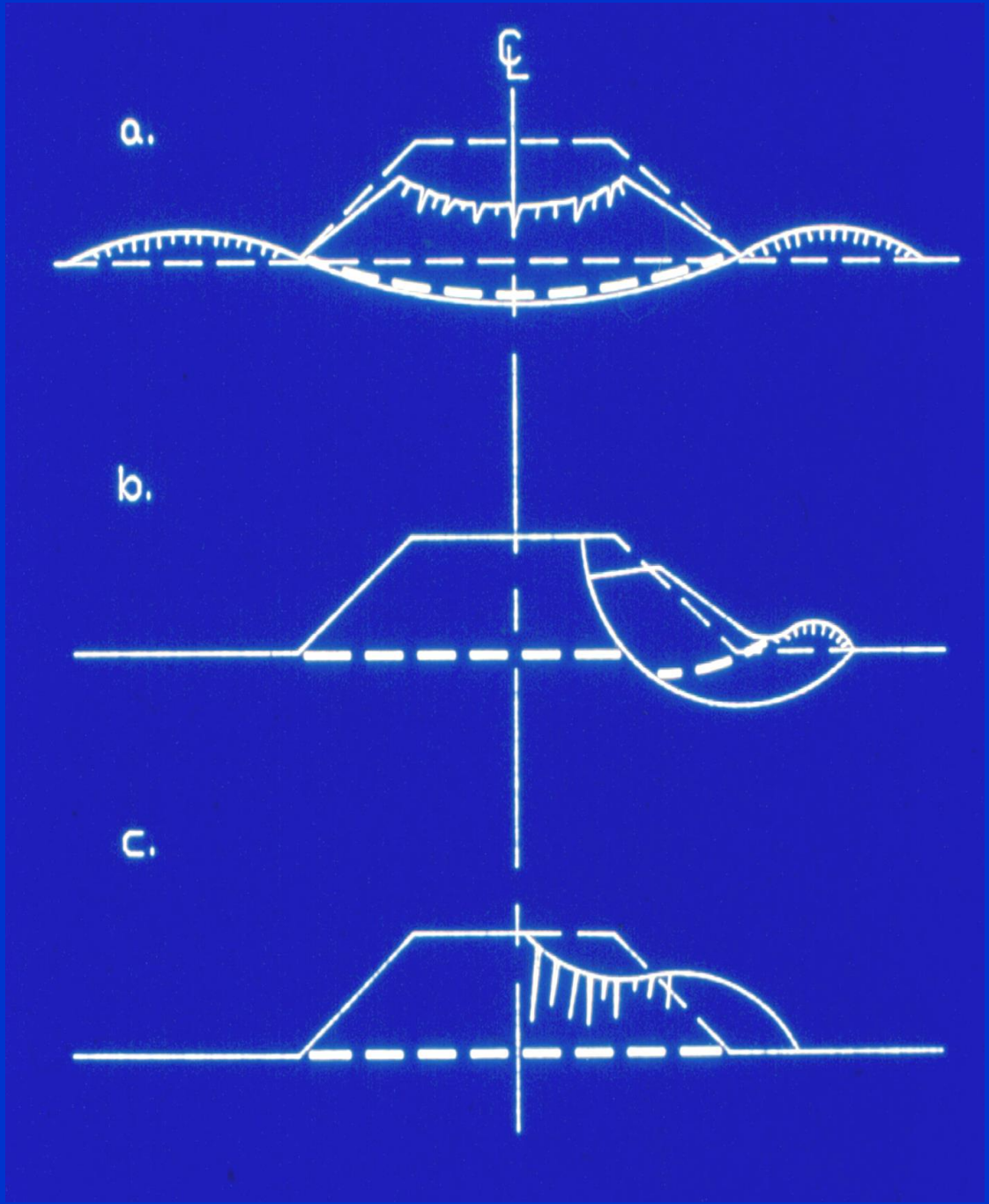

5.

6.

7.

Fig. 7-2

5. Overall bearing capacity*

$$q_{allowable} = \frac{c\ N_c}{F.S.}$$

where:

c = undrained shear strength

N_c = bearing capacity factor

FS = factor of safety

****from bearing capacity of shallow foundations***

Bearing capacity

- Reinforcement does NOT increase bearing capacity of foundation soil, but…
- Reinforcement enhances beneficial effects of :
  - Limited thickness of soft soils
  - Strength increase with depth
  - Dry crust
  - Berms and flat side slopes
  - Pore pressure dissipation (of staged construction w/ or w/o PV drains…)

Fig. 7-5
Page 7-16

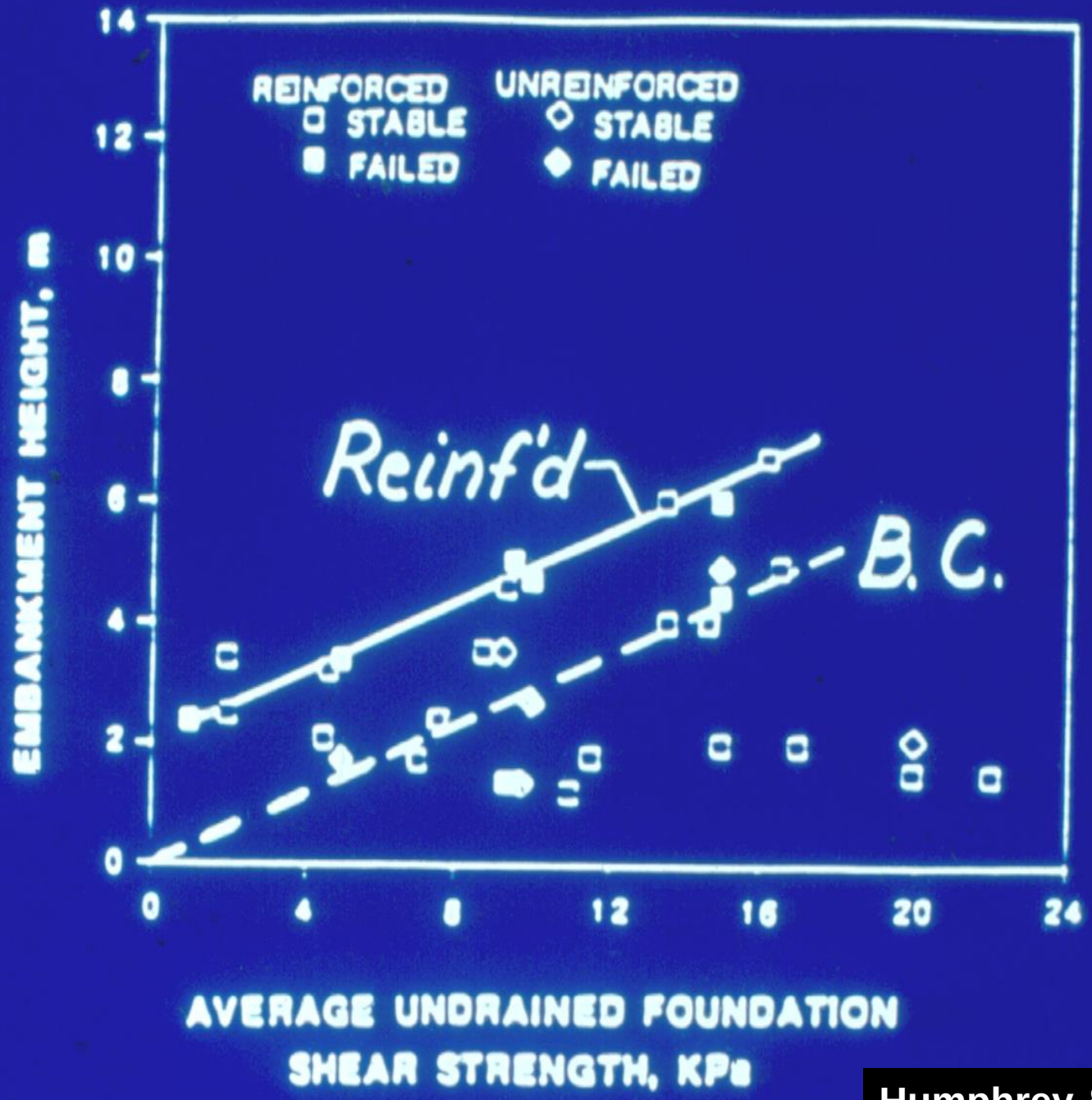

Humphrey & Holtz (1987)

5. BC — Lateral squeeze analysis

Check this…especially if soft soil is of limited depth.

(See commentary—pp 7-14 to 7-18)

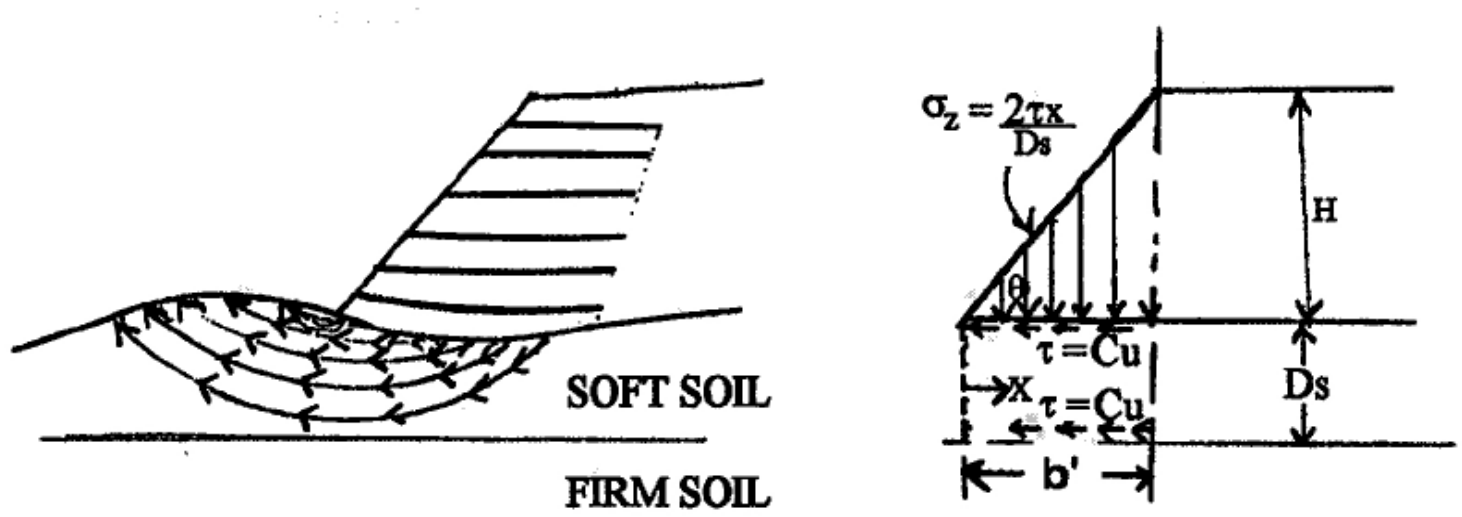

$$FS = \frac{2c_u}{\gamma D_s (\tan\theta)} + \frac{4.14 c_u}{H\gamma}$$

Figure 7-6. Local bearing failure (lateral squeeze).

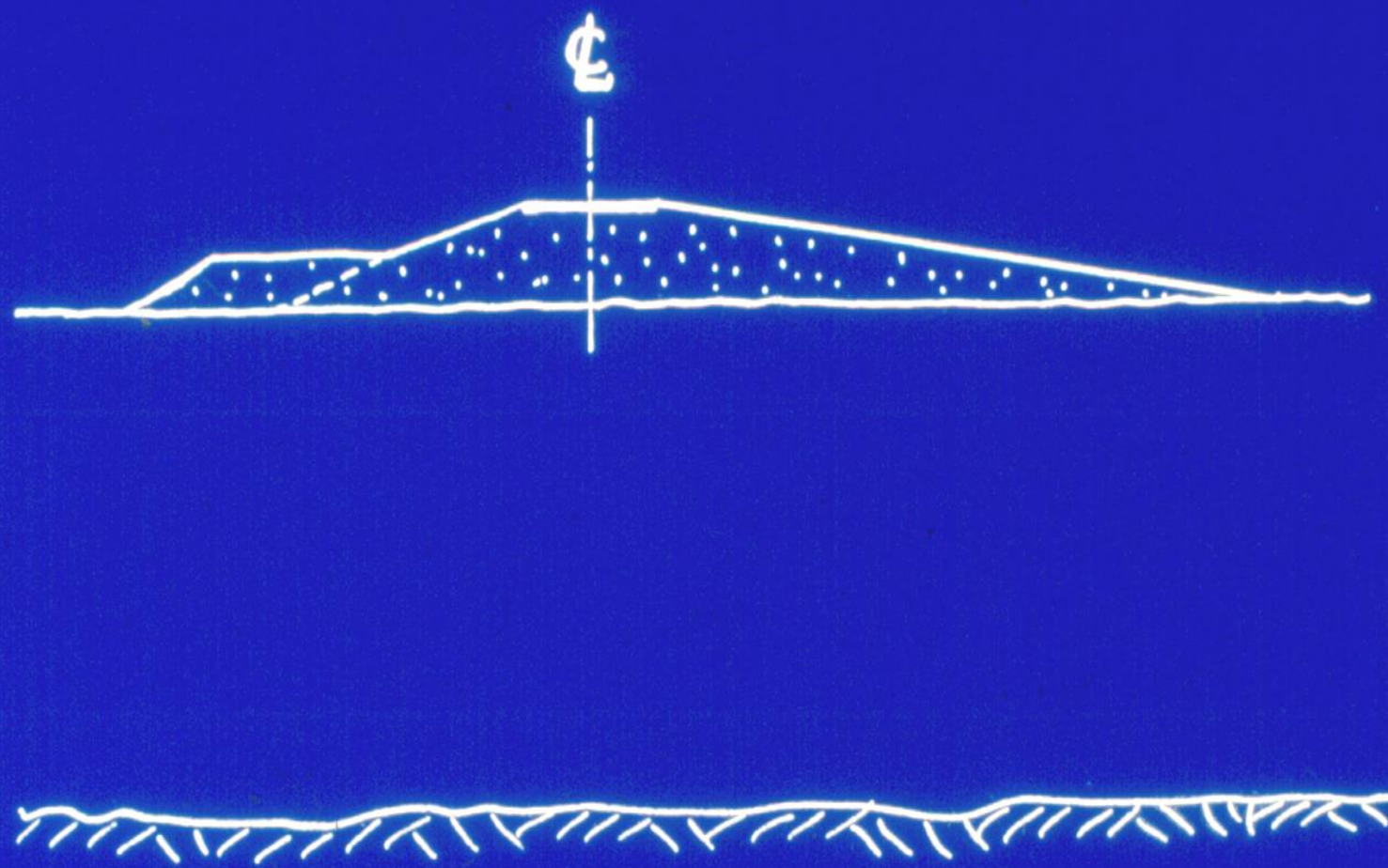

6. Rotational failure

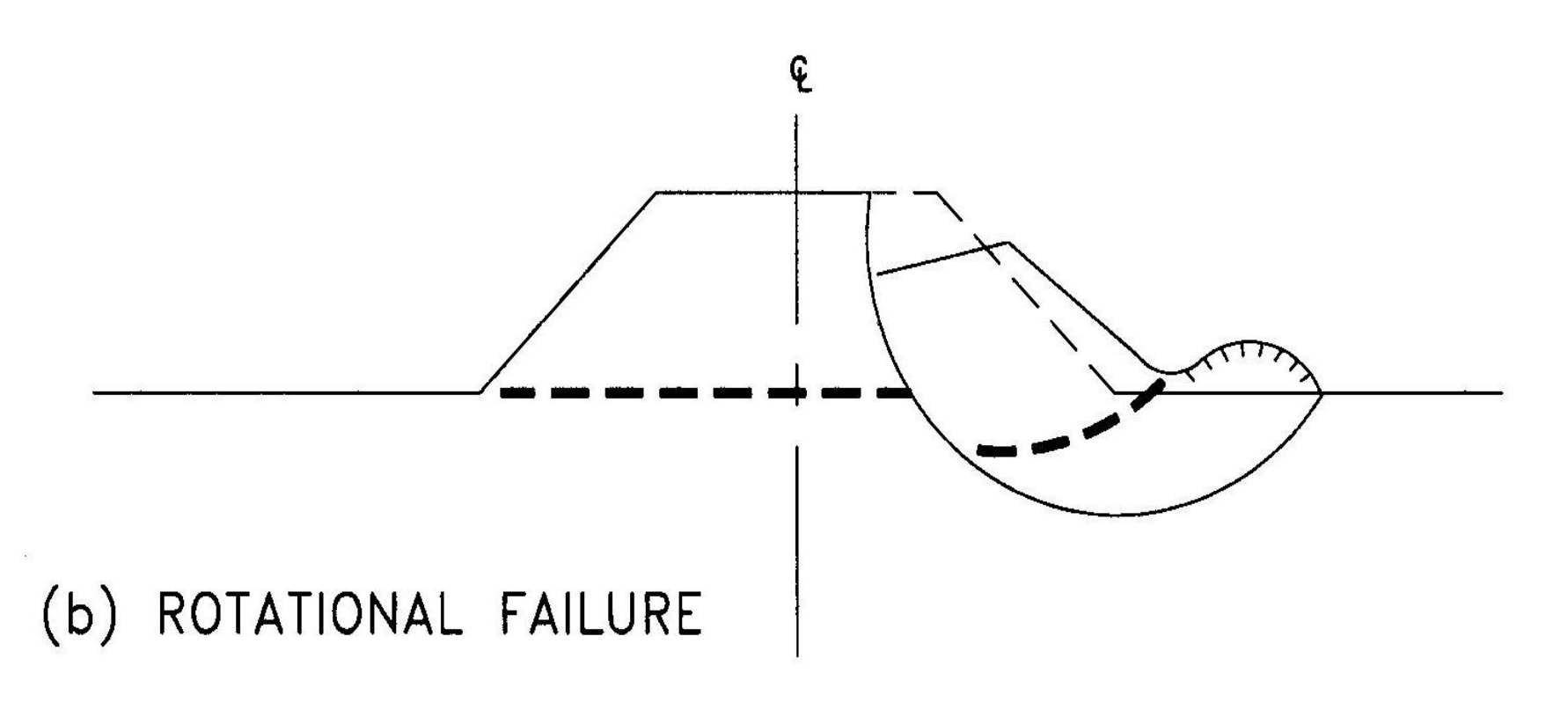

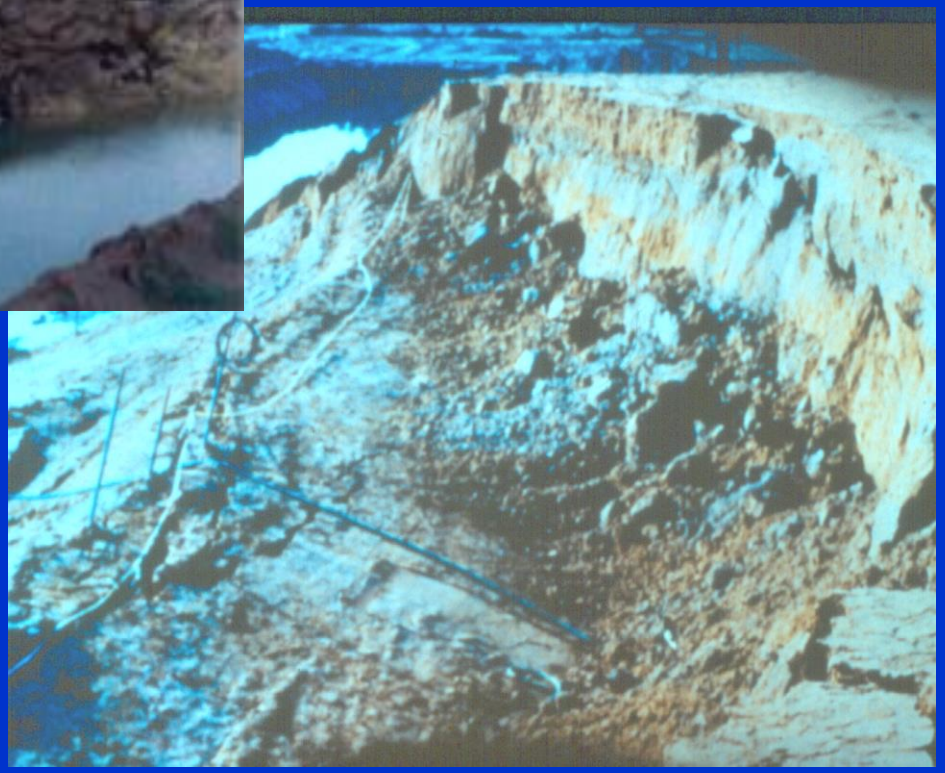

Reinforced test embankment

AIT, Bangkok, Thailand

6. Rotational failure

- Use limit equilibrium methods
- Reinforcement increases FS
- See Fig. 7-3a

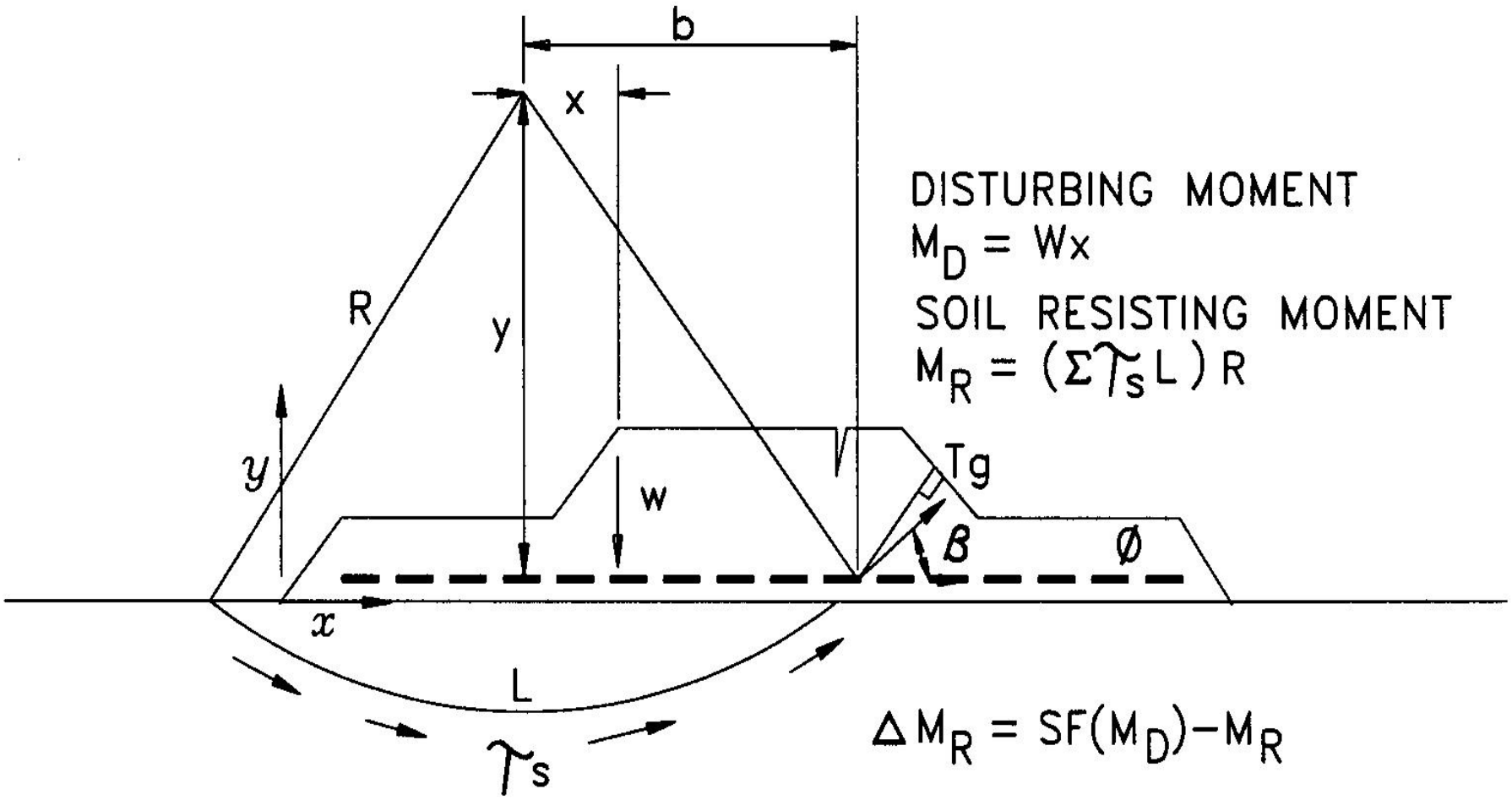

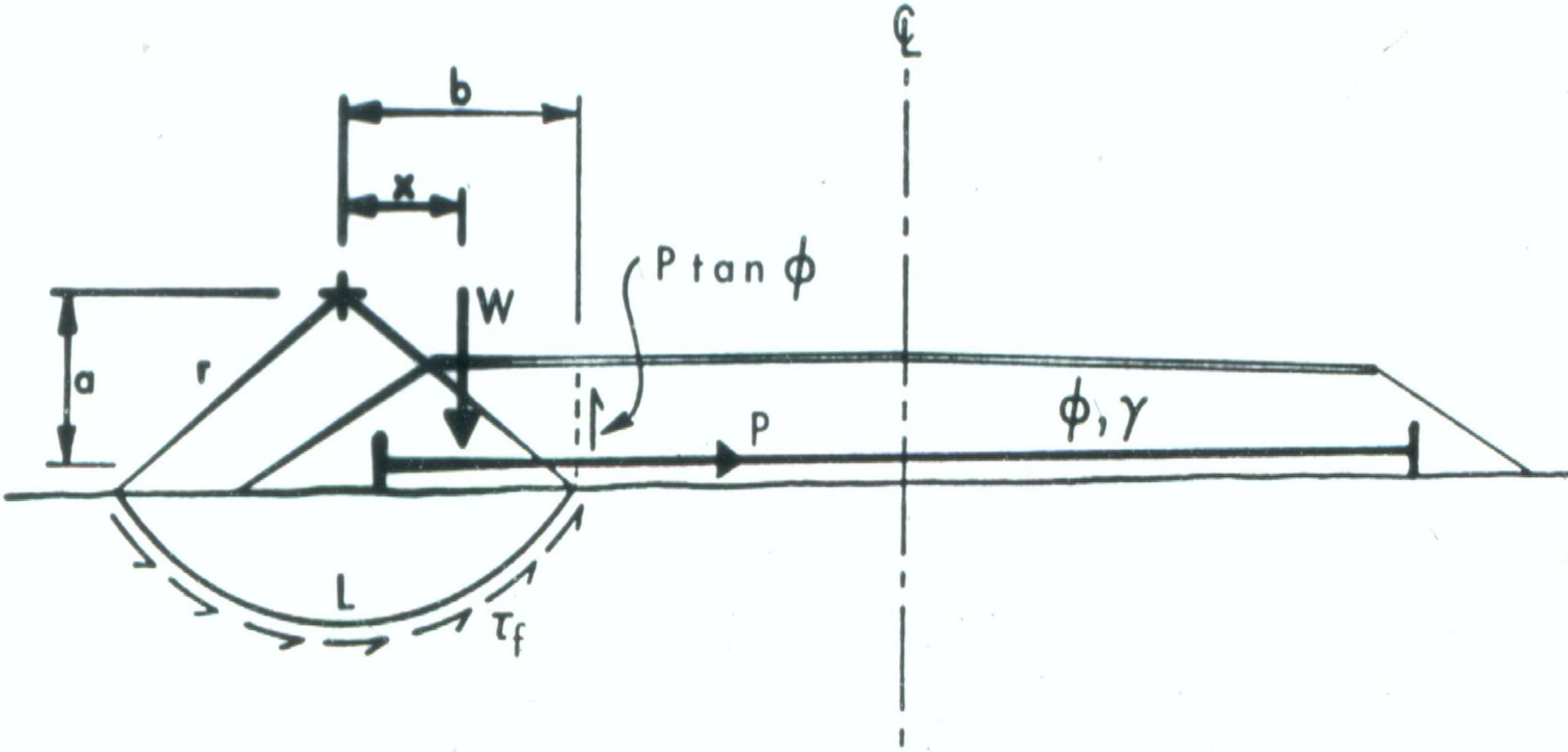

$$FS = \frac{\tau_f L r + P a + P (\tan \phi)\, b}{W x} \geq 1.5$$

Wager and Holtz (1976)

Rotational Failure Mode

- $\beta = f$ (*D/B* and shear strength of foundation)
- $\beta = 0$ to θ
- See Fig. 7-3b

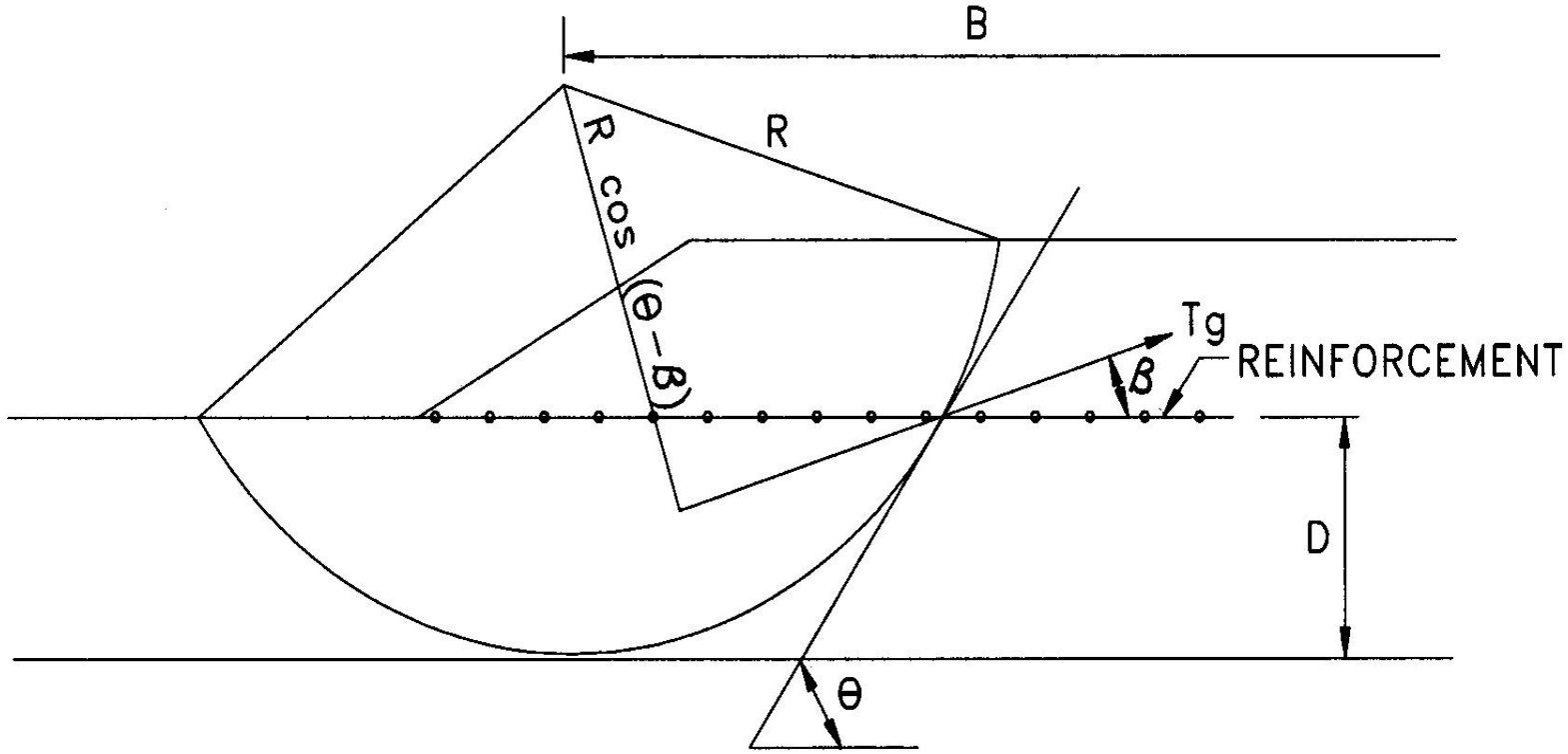

$$M_r = T_g[R \cos(\theta - \beta)]$$

$$\phi \leq \beta \leq \theta$$

7. Lateral spreading

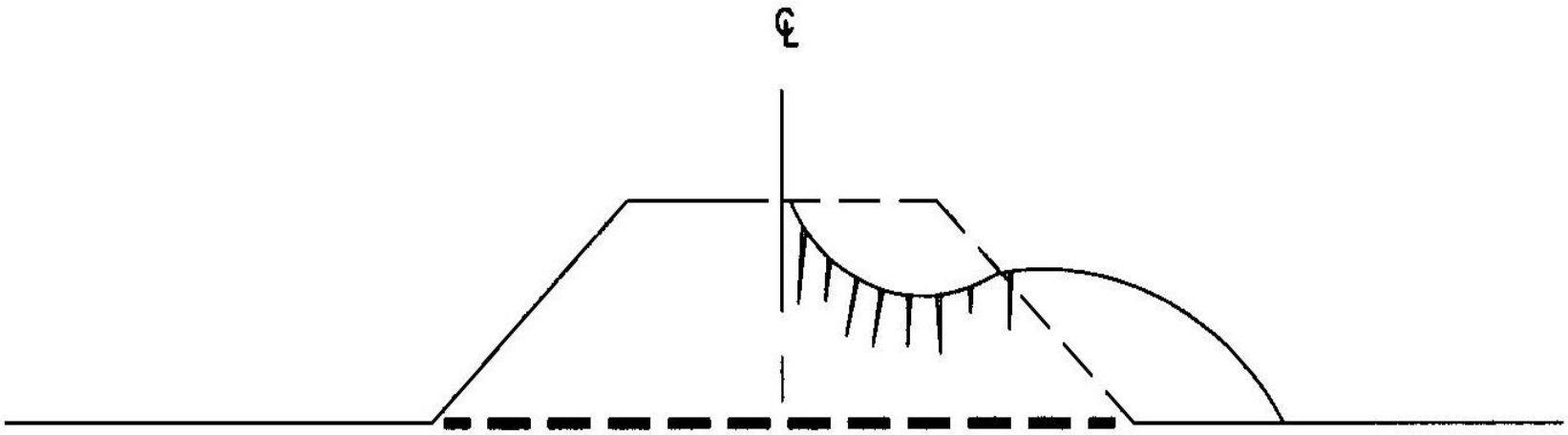

(c) LATERAL SPREADING

Rupture (Fig. 7-4a)

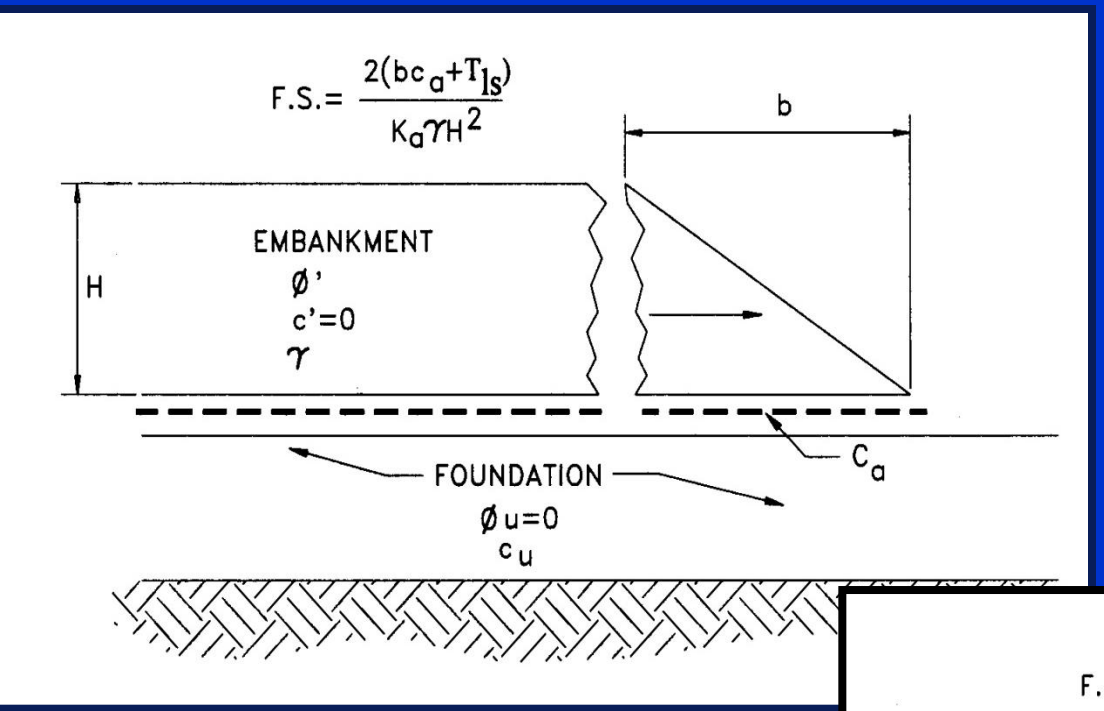

Sliding (Fig. 7-4b)

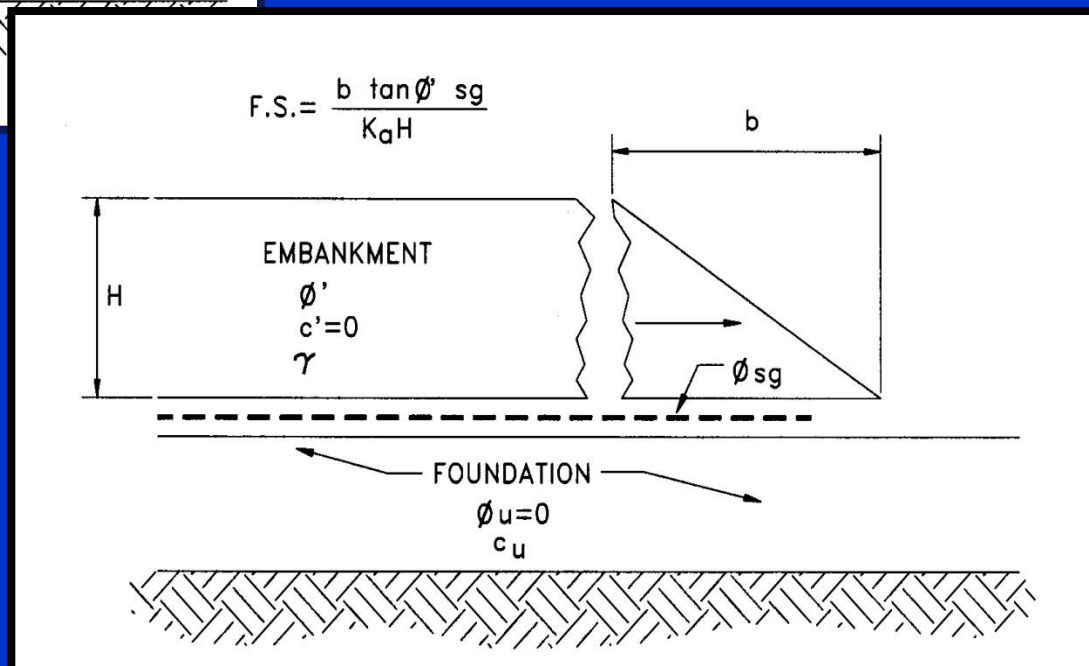

8. Limiting deformation

$$J = \frac{T_{ls}}{\varepsilon_{Geosynthetic}}$$

Limit geosynthetic strain to:	
5% to 10%	Cohesionless soils (embankment)
2%	Cohesive soils (embankment)
2% to 10%	Peats (foundation)

(p 7-9 and p 7-21/22)

9. Geosynthetic longitudinal strength requirements (in alignment direction)

A. Check BC and rotational slope stability at embankment ends (Steps 5 & 6)

B. Use strength and elongation from Steps 7 & 8 to control embankment spreading during construction and settlement after construction.

C. Use the higher of strengths from A or B to control the transverse seam strengths.

See page 7-12

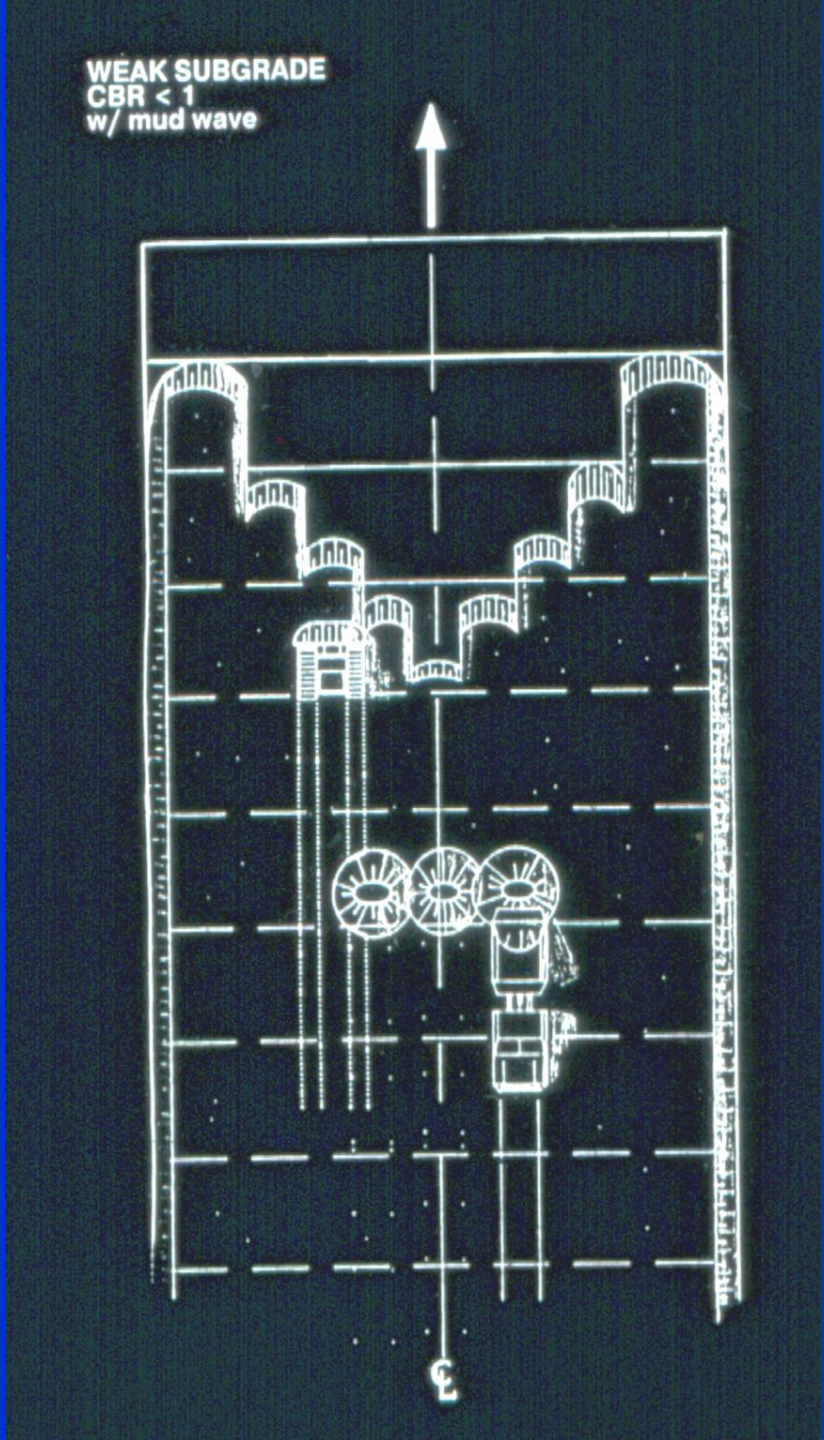

Note: Strength of the longitudinal seams controls stability during construction.

Fig. 7-8, page 7-49

Factor of Safety…

If FS > 1 w/o geosynthetic:

-- Reinforcement increases FS

If FS << 1 w/o geosynthetic:

-- Geosynthetic enables construction

-- Geosynthetic must work!

Any questions about <u>design</u>?

MATERIAL PROPERTIES and TEST METHODS

Soil Properties

- as usual

ANY QUESTIONS ABOUT SOIL PROPERTIES????

Geosynthetic requirements:

See Table 7-1, p 7-25

Geosynthetic requirements:

- Design tensile strength
- Deformation @ failure
- Modulus @ design strain
- Soil-geosynthetic friction
- Creep??
- Survivability / workability
- Drainage & filtration
- Seams

(See Sect. 7-4, pp 7-25 –7-28, and Table 7-1)

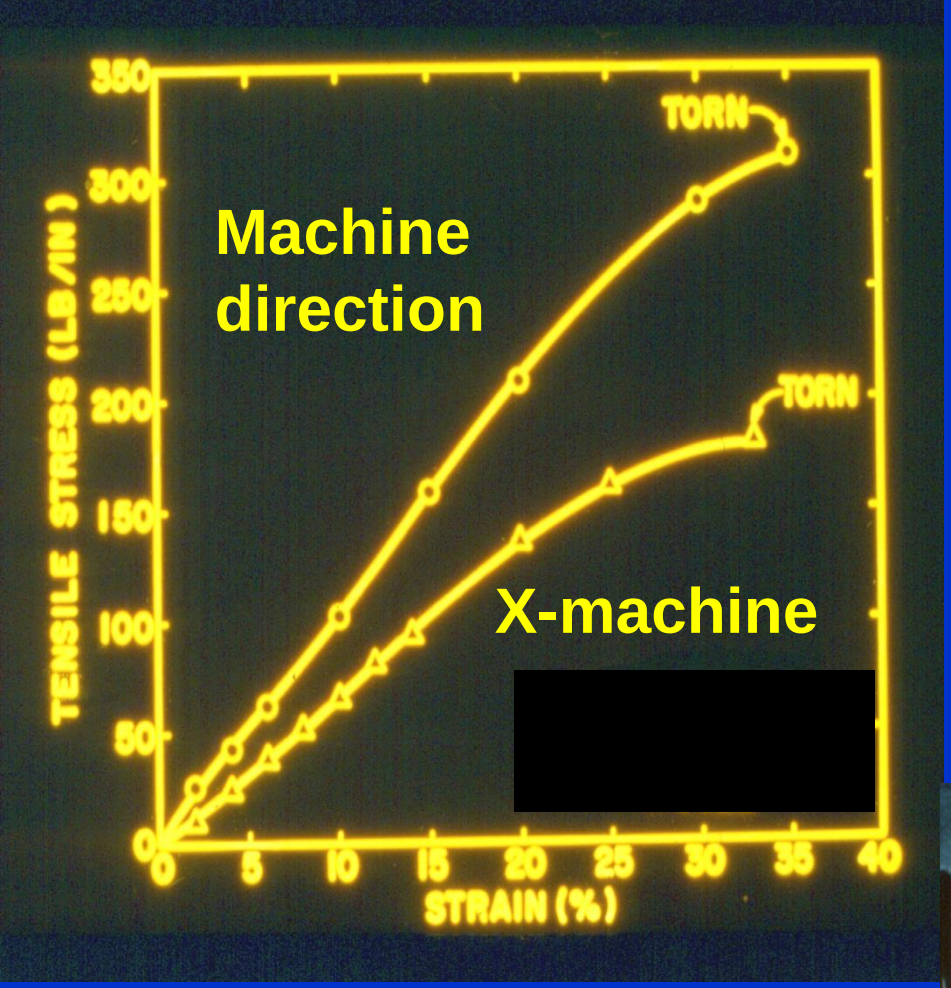
TENSILE STRESS (LB/IN)
350
300
250
200
150
100
50
0
0
5
10
15
20
25
30
35
40
STRAIN (%)
TORN
TORN
Machine direction
X-machine

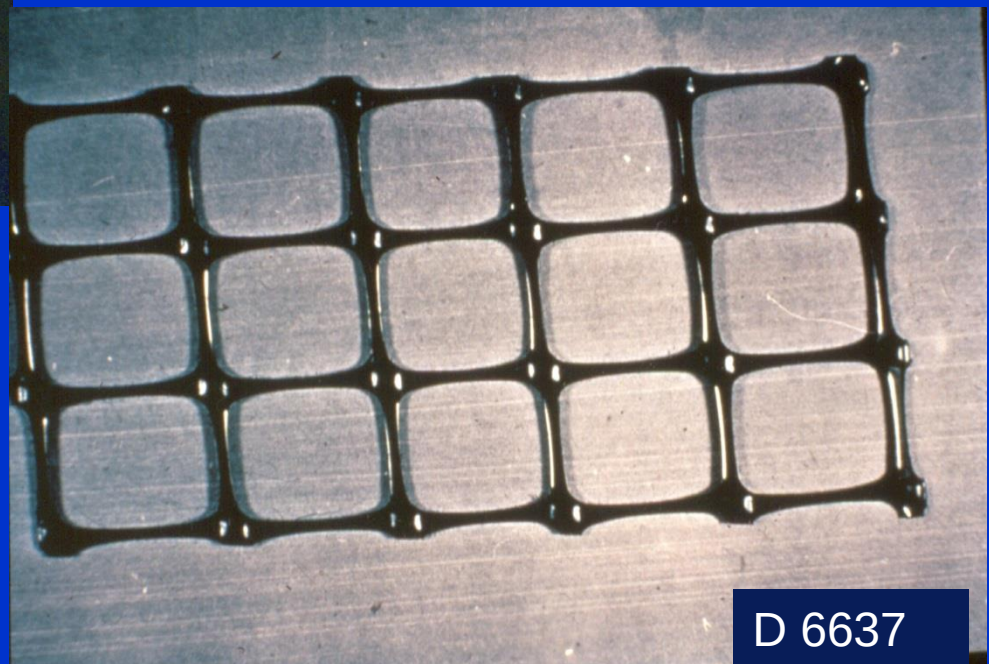
D 6637

Test seams

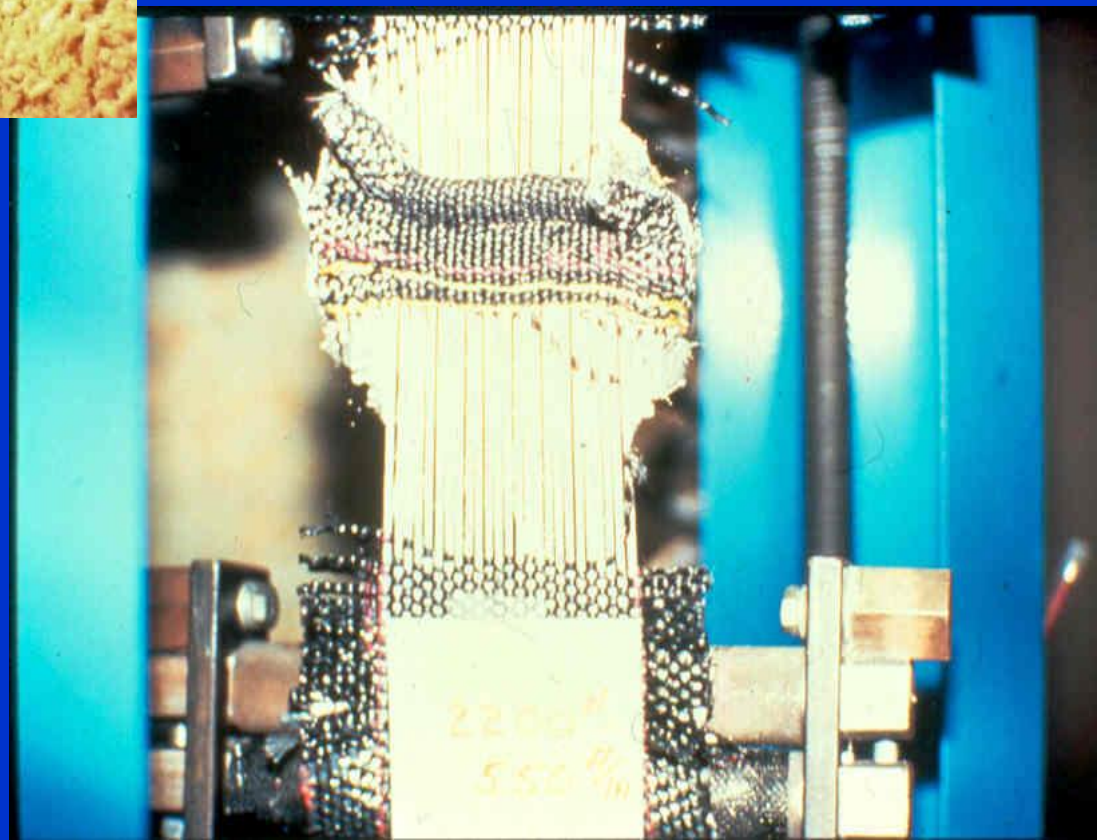

Geotextile properties (con't)

- Soil-geotextile friction
  - Use direct shear (ASTM D 5321)
    or
    pullout tests (ASTM D 6706)

Geotextile properties (con't)

- Creep??
- Drainage, filtration *
- Survivability
  - (see Christopher & Holtz, 1985,1989)
- Workability
  - (stiffness)

*See Chap. 2 in *Geosynthetic Design and Construction Guidelines, FHWA NHI-07-092 (2008)*

Settlement and Creep

Rate of settlement of embankment
vs.
Creep rate of geotextile

Geosynthetic survivability

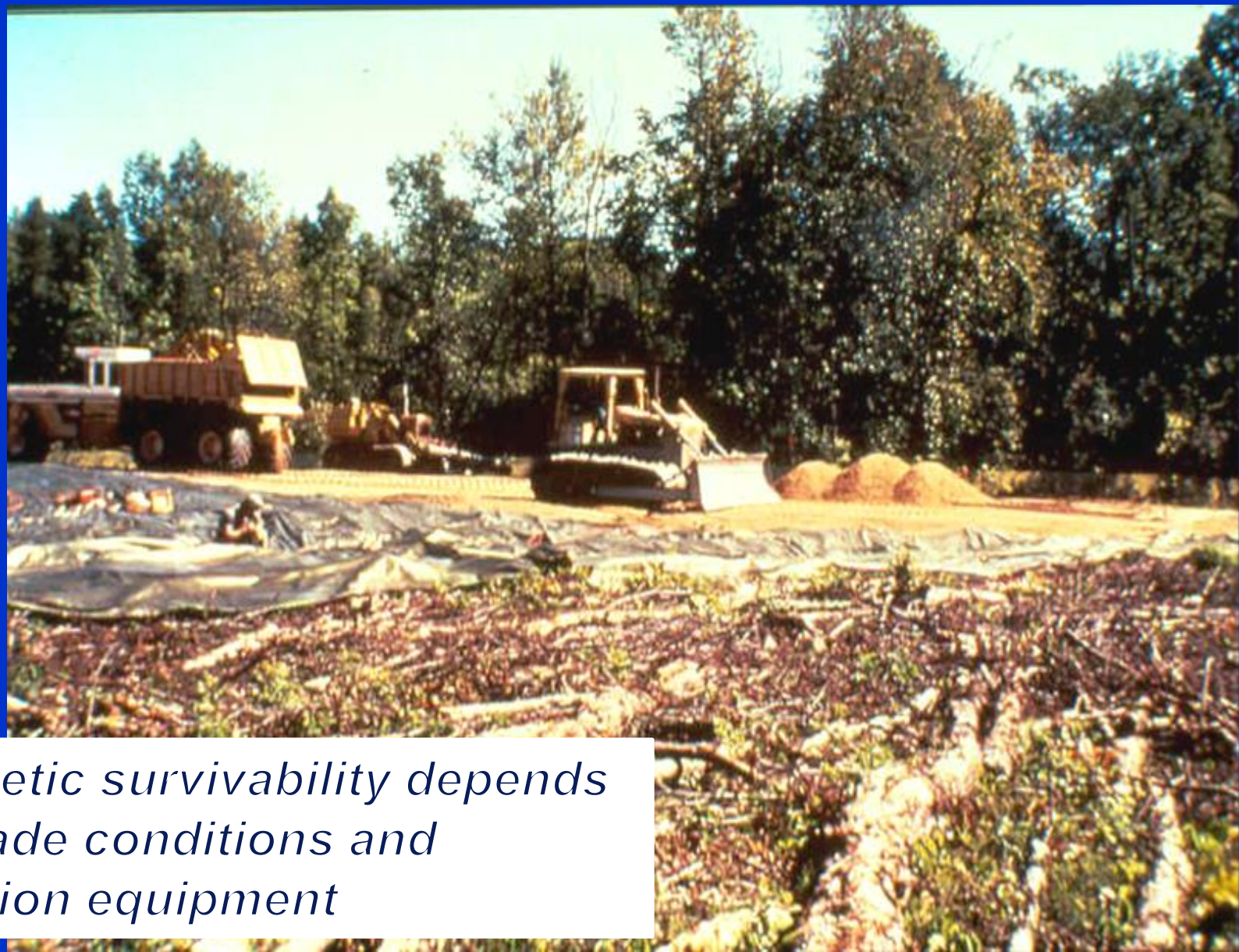

Geosynthetic survivability depends on subgrade conditions and construction equipment

High survivability conditions

Low survivability conditions

- ***Geosynthetic survivability***

  -- Subgrade & equipment **(Table 7-2)**

  -- Cover material & equipment **(Table 7-3)**

  -- Properties **(Tables 7- 4 & 7-5)**

Important geosynthetic concept:

Geosynthetic cannot perform any function unless it survives installation, aggregate placement, and initial traffic....

350B

GRADALL
G-880
GRADALL

G-880
12-14
GRADALL

GRADALL

Stiffness and workability: see Sect 7.4 - 5

The ability of a geosynthetic to support workers and construction equipment is called its field workability.

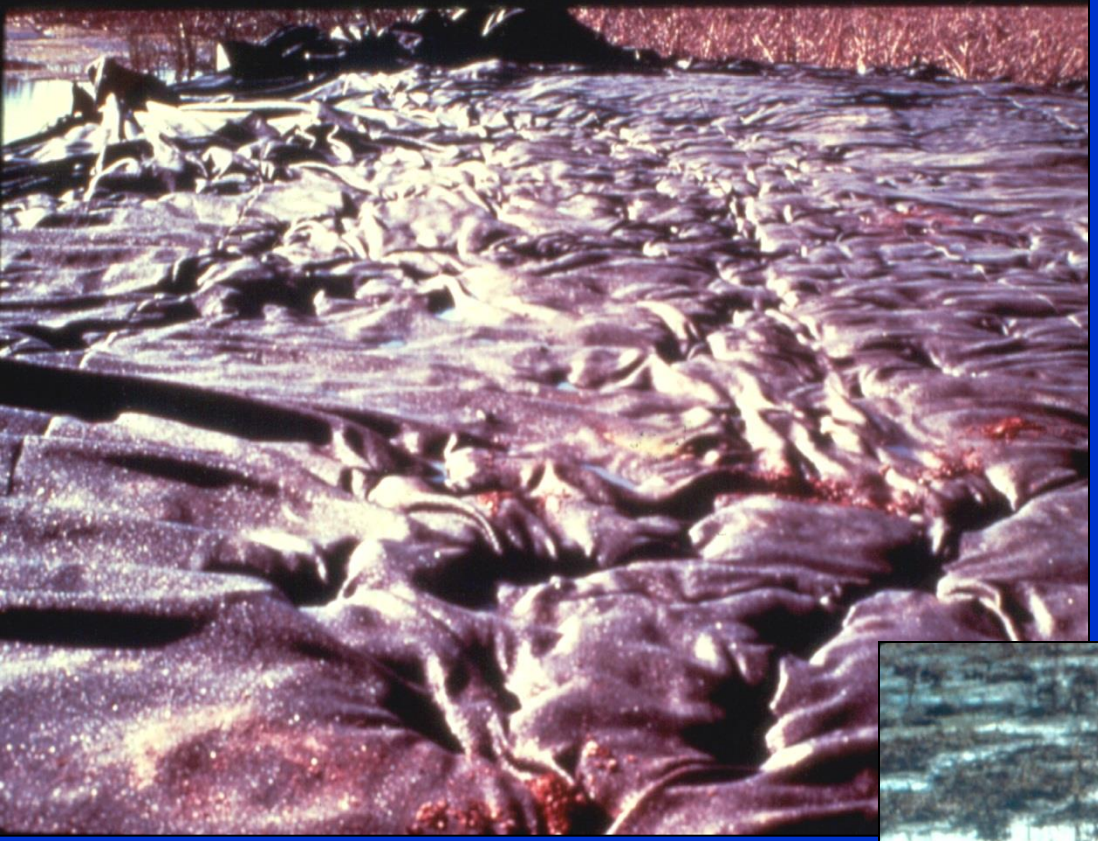

DESIGN EXAMPLE

Sect. 7.5, pp 7-33 to 7-39

Specifications

Section 7.6, pp 7-39-48

¿¿¿¿

Any questions about <u>soils</u> and <u>geosynthetics properties</u>?

CONSTRUCTION

- Equipment selection
- Site preparation
- Geotextile placement
- Fill placement
  - Extremely soft ground
  - Moderate ground, CBR > 1

Site preparation

- Working table is usually not necessary
  - Dry crust?
  - Vegetation or root mat?
- Use a high survivability geosynthetic instead
- Geosynthetic-reinforced access roads may be required

4223

Geosynthetic placement

- Connect all seams
  - If geotextiles--sew
  - If geogrids--use bodkin joints
- Place fairly flat
- Use “mud wave” technique on very soft soils
- Field workability may determine rate of placement

Geotextile overlaps instead of seams?

Sewing

Simplicity

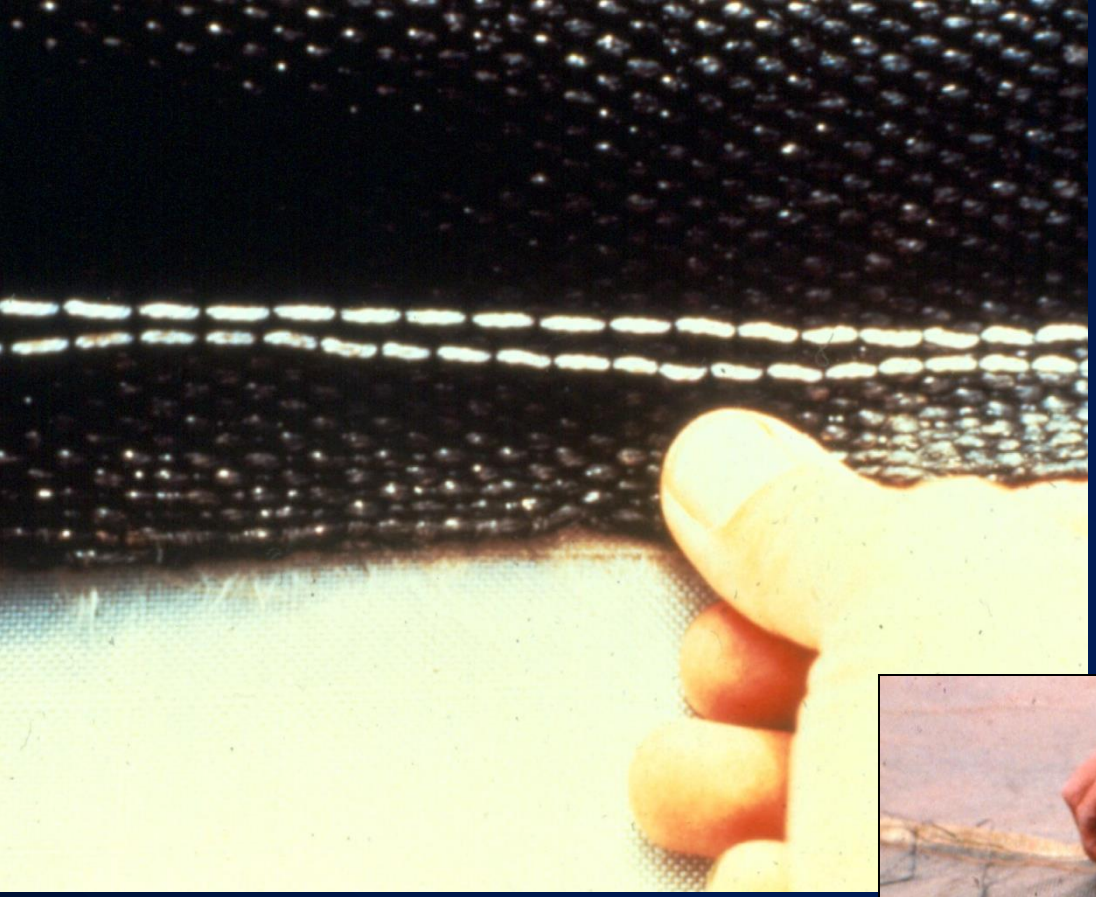

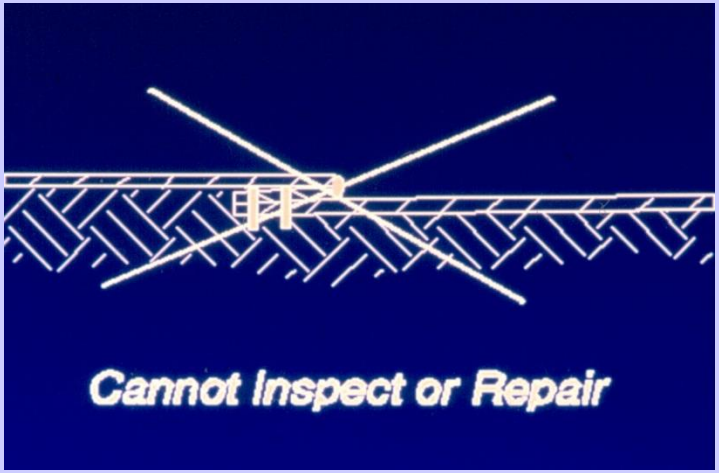
Cannot Inspect or Repair

Geogrids

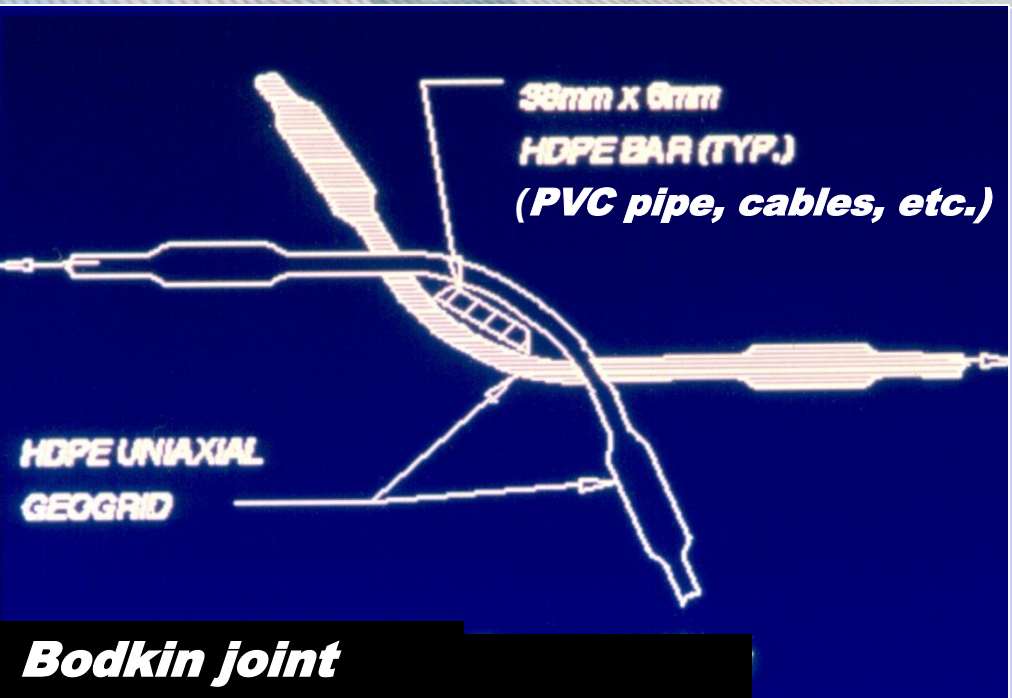

Bodkin joint

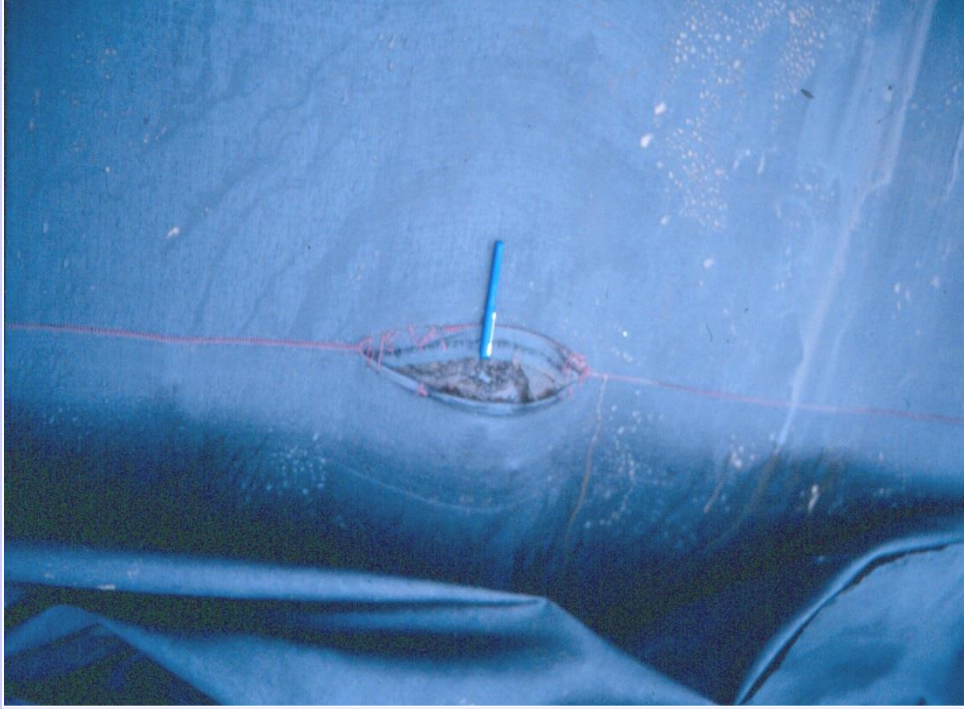

Geosynthetic placement

Construction concept --

- Rate of geotextile placement is often proportional to its ability to support contractor's workers

  (Geotextile field workability)

Placement/compaction of fill

1. Use low-ground pressure equipment
2. Use cohesionless fill
3. Keep “U”-shaped leading edge

Staged construction

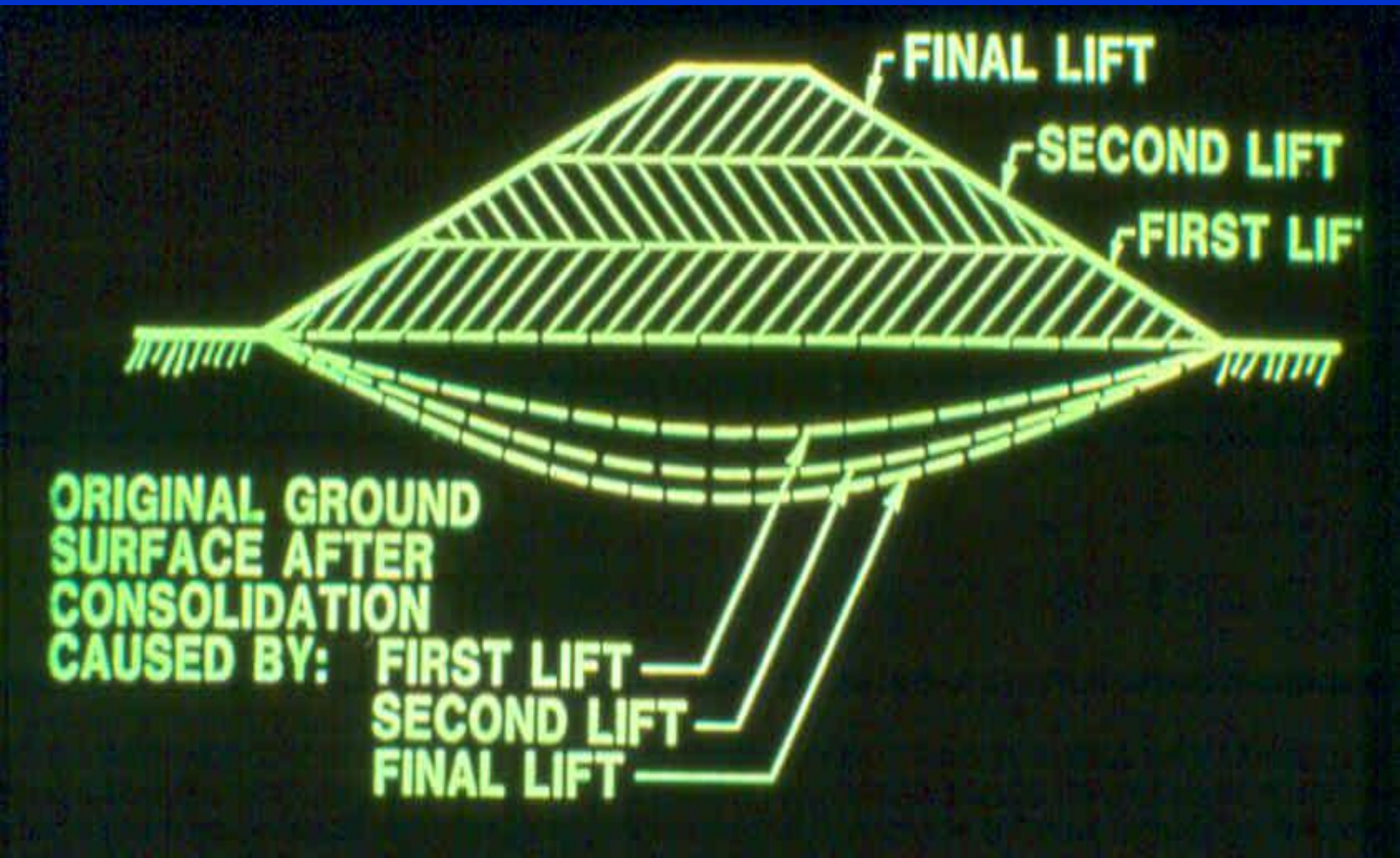

Sequence of construction

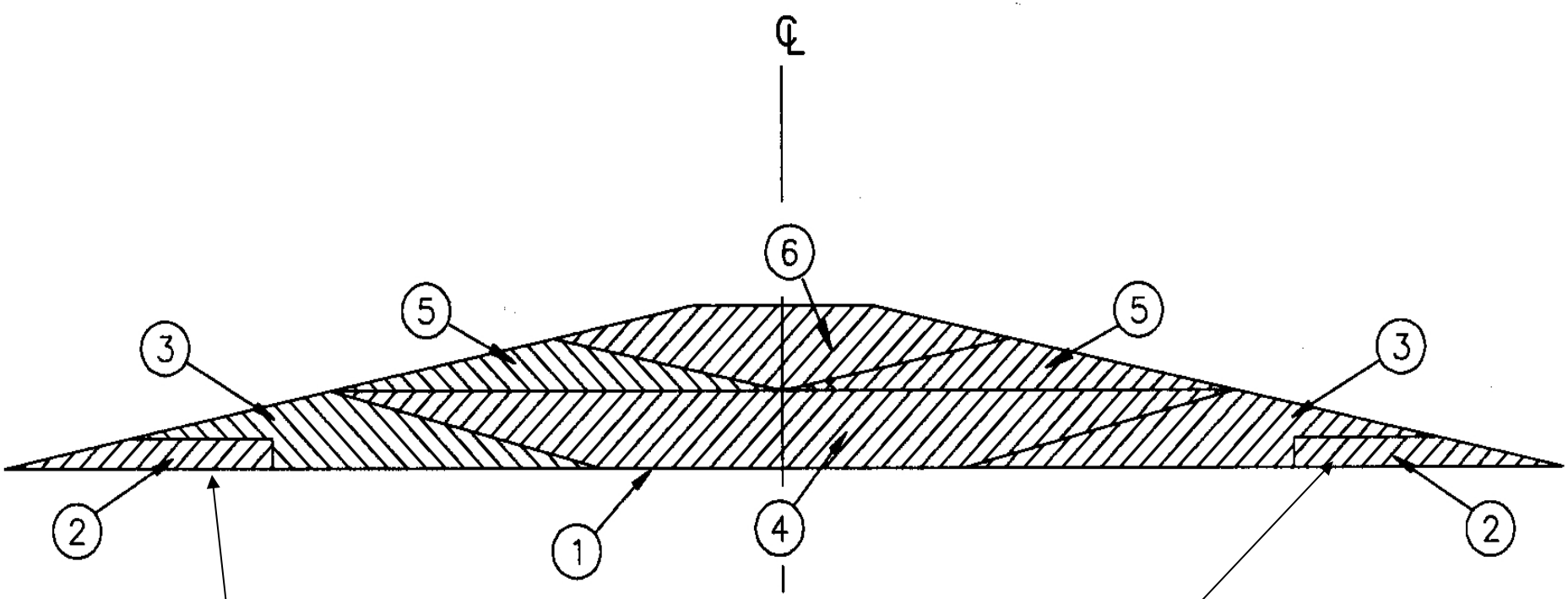

Geosynthetic-reinforced haul roads…

Figure 7-7

Weak subgrades

(*CBR* < 1; τ_f < 30 kPa
-- mud wave
anticipated)

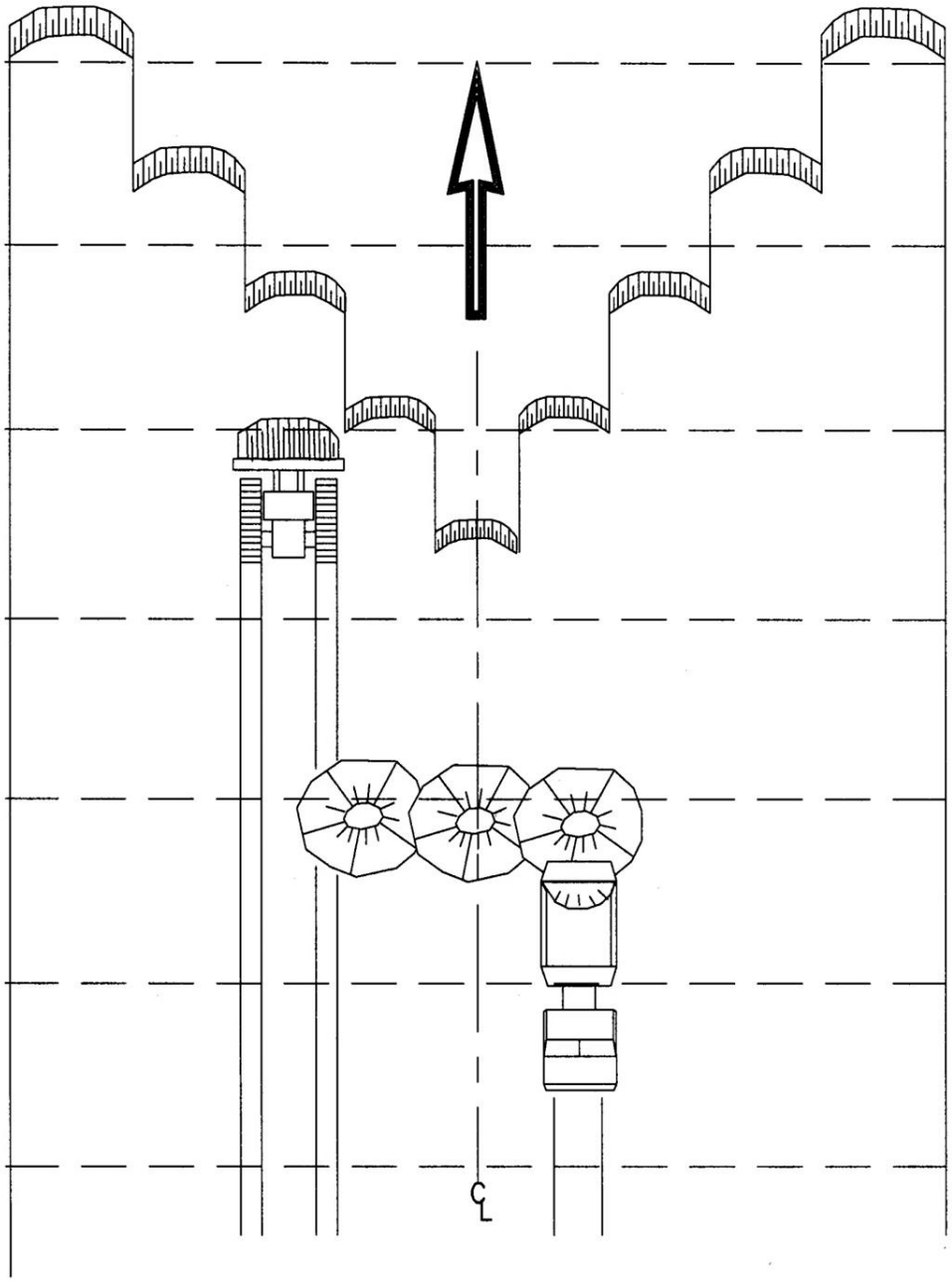

Figure 7-8

3500

Moderate ground conditions

(*CBR* > 1)

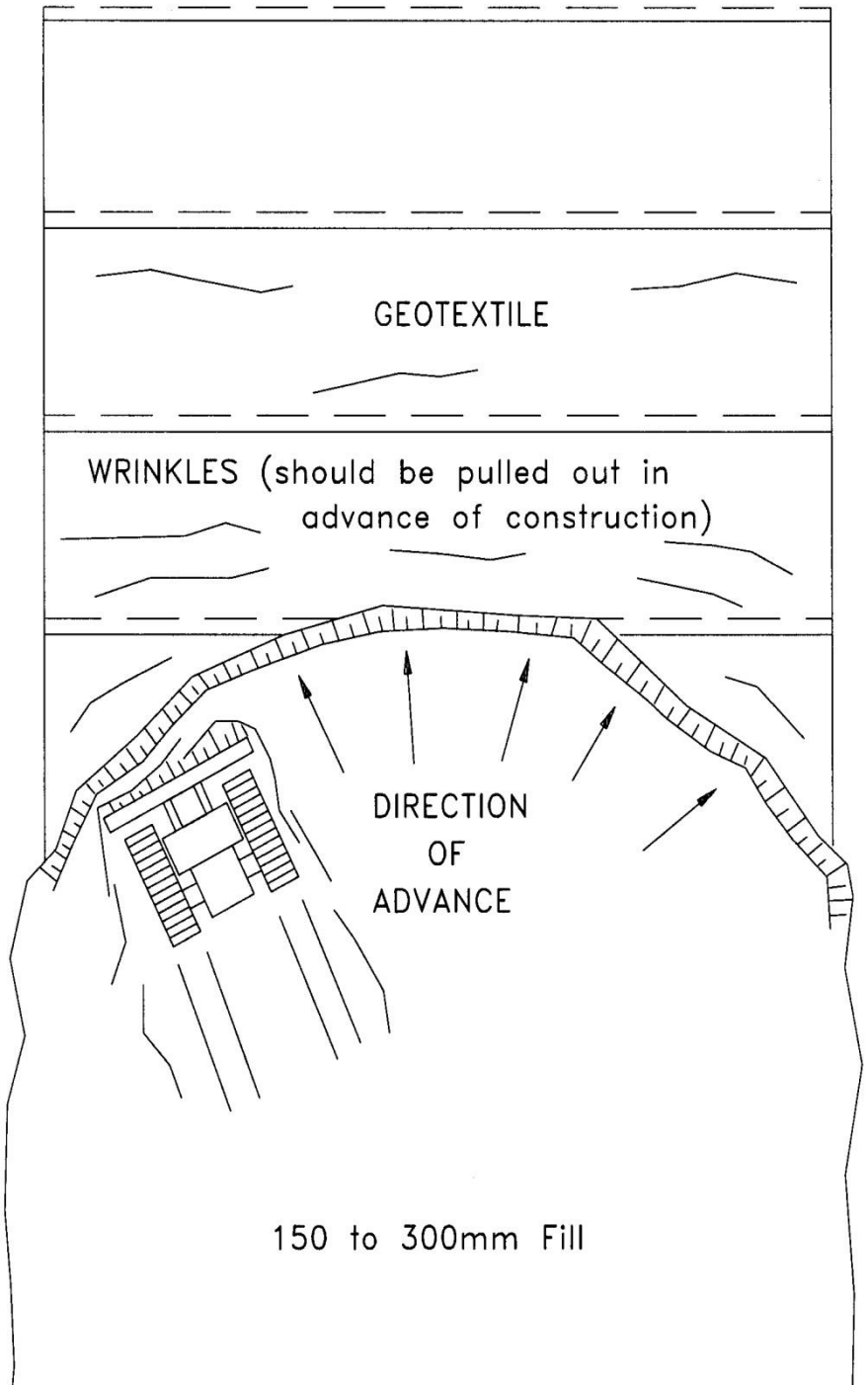

Figure 7-9

???

Questions

???

Summary….what we did today

- **Conventional solutions to embankments on very soft foundations; geosynthetics applications, case histories; etc.**
- **Design (concepts and design details)**
- **Material properties (soils; geosynthetics)**
- **Construction procedures for reinforced embankments**

Questions???

holtz@uw.edu