U.S. Department of Transportation
Federal Highway Administration

Publication No. FHWA NHI-07-092
August 2008

NHI Course No. 132013

Geosynthetic Design & Construction Guidelines

Reference Manual





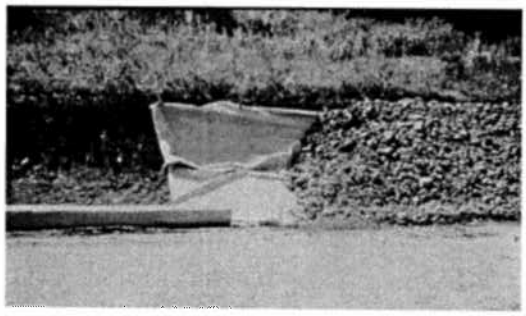

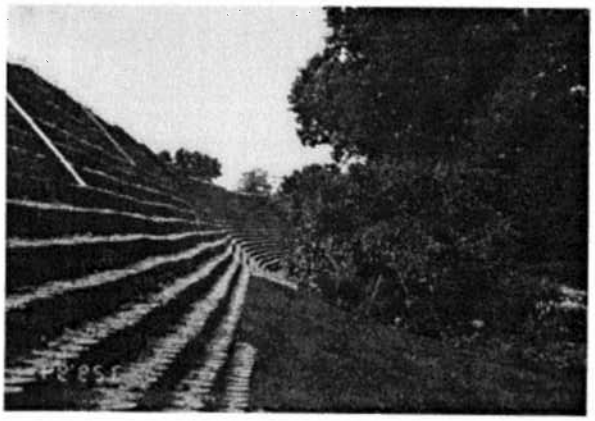

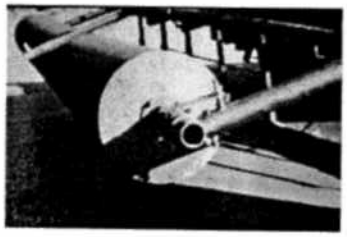

National Highway Institute

Technical Report Documentation Page

1. REPORT NO. FHWA-NHI-07-092	2. GOVERNMENT ACCESSION NO.	3. RECIPIENT'S CATALOG NO.
4. TITLE AND SUBTITLE Geosynthetic Design and Construction Guidelines		5. REPORT DATE August 2008 6. PERFORMING ORGANIZATION CODE
7. AUTHOR(S) Robert D. Holtz, Ph.D., P.E., Barry R. Christopher, Ph.D., P.E. and Ryan R. Berg, P.E.		8. PERFORMING ORGANIZATION REPORT NO.
9. PERFORMING ORGANIZATION NAME AND ADDRESS Ryan R. Berg & Associates, Inc. 2190 Leyland Alcove Woodbury, MN 55125		10. WORK UNIT NO. 11. CONTRACT OR GRANT NO. DTFH61-02-T-63036
12. SPONSORING AGENCY NAME AND ADDRESS National Highway Institute Federal Highway Administration U.S. Department of Transportation Washington, D.C.		13. TYPE OF REPORT & PERIOD COVERED 14. SPONSORING AGENCY CODE

15. SUPPLEMENTARY NOTES
FHWA COTR – Larry Jones
FHWA Technical Consultants: Jerry A. DiMaggio, P.E. and Daniel Alzamora, P.E.
This manual is the updated version of FHWA HI-95-038 (updated 1998) prepared by Ryan R. Berg & Associates, Inc.; authored by R.D. Holtz, B.R. Christopher and R.R. Berg.

16. ABSTRACT This manual is an updated version of the FHWA Reference Manual for the National Highway Institute's training courses on geosynthetic design and construction. The update was performed to reflect current practice and codes for geosynthetics in highway works. The manual was prepared to enable the Highway Engineer to correctly identify and evaluate potential applications of geosynthetics as alternatives to other construction methods and as a means to solve construction problems. With the aid of this text, the Highway Engineer should be able to properly design, select, test, specify, and construct with geotextiles, geocomposite drains, geogrids and related materials in drainage, sediment control, erosion control, roadway, and embankment of soft soil applications. Steepened reinforced soil slopes and MSE retaining wall applications are also addressed within, but designers are referred to the more detailed FHWA NHI-00-043 reference manual on these subjects. This manual is directed toward geotechnical, hydraulic, pavement, bridge and structures, construction, maintenance, and route layout highway engineers, and construction inspectors and technicians involved with design and/or construction and/or maintenance of transportation facilities that incorporate earthwork.

17. KEY WORDS geosynthetics, geotextiles, geogrids, geomembranes, geocomposites, roadway design, filters, drains, erosion control, sediment control, separation, embankments, soil reinforcement		18. DISTRIBUTION STATEMENT No restrictions.	
19. SECURITY CLASSIF. Unclassified	20. SECURITY CLASSIF. Unclassified	21. NO. OF PAGES 592	22. PRICE

7.0 REINFORCED EMBANKMENTS ON SOFT FOUNDATIONS

7.1 BACKGROUND

Embankments constructed on soft foundation soils have a tendency to spread laterally because of horizontal earth pressures acting within the embankment. These earth pressures cause horizontal shear stresses at the base of the embankment that must be resisted by the foundation soil. If the foundation soil does not have adequate shear resistance, failure can result. Properly designed horizontal layers of high-strength geotextiles or geogrids can provide reinforcement, which increase stability and prevent such failures. Both materials can be used equally well, provided they have the requisite design properties. There are some differences in how they are installed, especially with respect to seaming and field workability. Also, at some very soft sites, especially where there is no root mat or vegetative layer, geogrids may require a lightweight geotextile separator to provide filtration and prevent contamination of the first lift if it is an open-graded or similar type soil. A lightweight geotextile is not required beneath the first lift if it is sand, which meets soil filtration criteria.

The reinforcement may also reduce horizontal and vertical displacements of the underlying soil and thus reduce differential settlement. *It should be noted that the reinforcement will not reduce the magnitude of long-term consolidation or secondary settlement of the embankment.*

The use of reinforcement in embankment construction may allow for:

- an increase in the design factor of safety;
- an increase in the height of the embankment;
- a reduction or elimination of stabilizing side berms;
- a reduction in embankment displacements during construction, thus reducing fill requirements; and/or
- an improvement in embankment performance due to increased uniformity of post-construction settlement.

This chapter assumes that all the common foundation treatment alternatives for the stabilization of embankments on soft or problem foundation soils have been carefully considered during the preliminary design phase. Holtz (1989) discusses these treatment alternatives and provides guidance about when embankment reinforcement is feasible. In some situations, the most economical final design may be some combination of a conventional foundation treatment alternative together with geosynthetic reinforcement. Examples include preloading and stage construction with prefabricated (*wick*) vertical drains,

the use of stabilizing berms, lightweight fill or column supported embankments - each used with geosynthetic reinforcement at the base of the embankment. In addition to the information in Chapter 2 on prefabricated drains and Section 7.12 of this chapter on column supported embankments, FHWA NHI-06-020, Ground Improvement Methods Reference Manual – Volume II (Elias et al., 2006) provides detailed information on prefabricated vertical drains, column supported embankments, and lightweight fill technologies.

7.2 APPLICATIONS

Reinforced embankments over weak foundations typically fall into one of two situations - construction over uniform deposits, and construction over local anomalies (Bonaparte, Holtz, and Giroud, 1985). The more common application is embankments, dikes, or levees constructed over very soft, saturated silt, clay, or peat layers (Figure 7-1). In this situation, the reinforcement is usually placed with its strong direction perpendicular to the centerline of the embankment, and plane strain conditions are assumed to prevail. Additional reinforcement with its strong direction oriented parallel to the centerline may also be required at the ends of the embankment.

The second reinforced embankment situation includes foundations below the embankment that are locally weak or contain voids. These zones or voids may be caused by sinkholes, thawing ice (thermokarsts), old streambeds, or pockets of silt, clay, or peat (Figure 7-1). In this application, the role of the reinforcement is to bridge over the weak zones or voids, and tensile reinforcement may be required in more than one direction. Thus, the strong direction of the reinforcing must be placed in proper orientation with respect to the embankment centerline (Bonaparte and Christopher, 1987).

Geotextiles may also be used as separators for displacement-type embankment construction (Holtz, 1989) and as a stabilization layer to allow for embankment construction (see Chapter 5). In this application, the geotextile does not provide any reinforcement but only acts as a separator to maintain the integrity of the embankment as it displaces the subgrade soils. In this case, geotextile design is based upon constructability and survivability, and a high elongation material may be selected. Prefabricated geocomposite drains may also be placed as a drainage layer at the base of the embankment to allow for pore pressure dissipation and consolidation as an alternate to using clean, free draining granular fill for the first lift.

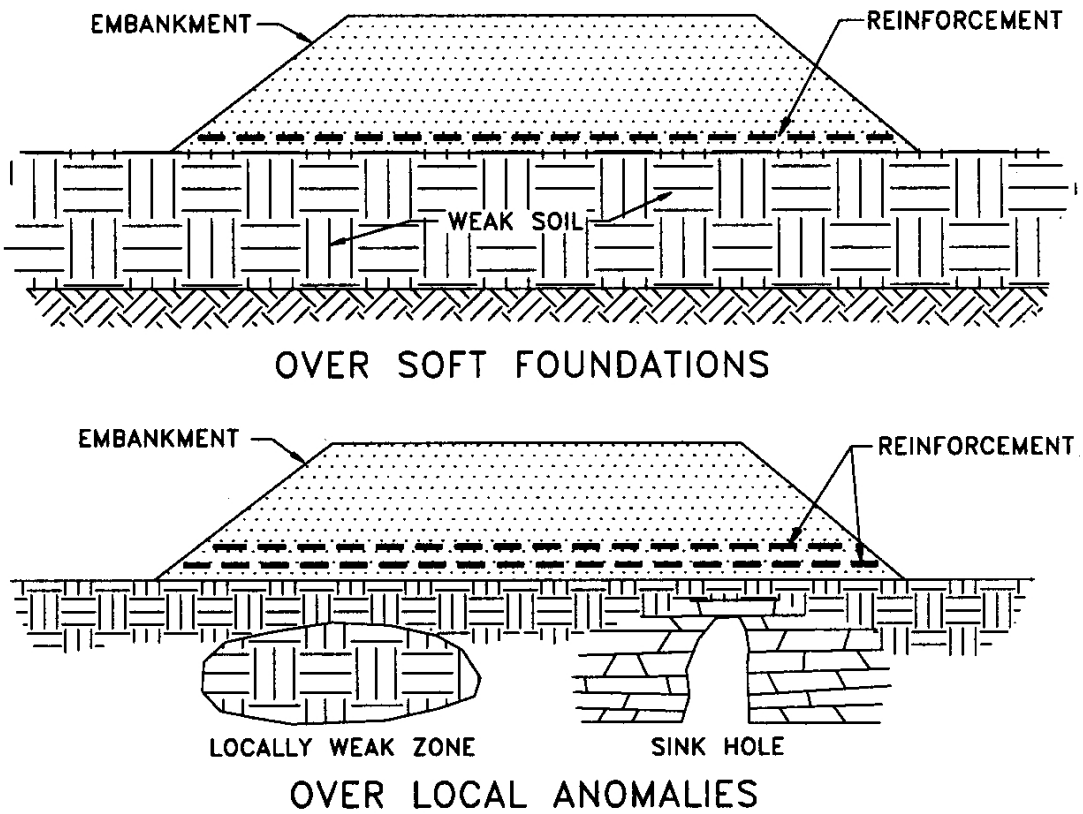

Figure 7-1. Reinforced embankment applications (after Bonaparte and Christopher, 1987).

Biaxial geogrids may also be used as a stabilization layer for embankment construction. This stabilization geogrid may provide reinforcement strength in the embankment's longitudinal direction (see Step 9 in Sections 7.3-2 and 7.3-3). A lightweight geotextile filter, if needed, can be used in conjunction with the geogrid.

7.3 DESIGN GUIDELINES FOR REINFORCED EMBANKMENTS ON SOFT SOILS

7.3-1 Design Considerations

As with ordinary embankments on soft soils, the basic design approach for reinforced embankments is to design against failure. The ways in which embankments constructed on soft foundations can fail have been described by Terzaghi and Peck (1967); Haliburton, Anglin and Lawmaster (1978 a and b); Fowler (1981); Christopher and Holtz (1985); and Koerner (1990), among others. Figure 7-2 shows unsatisfactory behavior that can occur in reinforced embankments. The three possible modes of failure indicate the types of stability analyses that are required. In addition, settlement of the embankment and potential creep of

the reinforcement must be considered, although creep is only a factor if the creep rate in the reinforcement is greater than the strength gain occurring in the foundation due to consolidation. Because the most critical condition for embankment stability is at the end of construction, the reinforcement only has to function until the foundation soils gain sufficient strength to support the embankment.

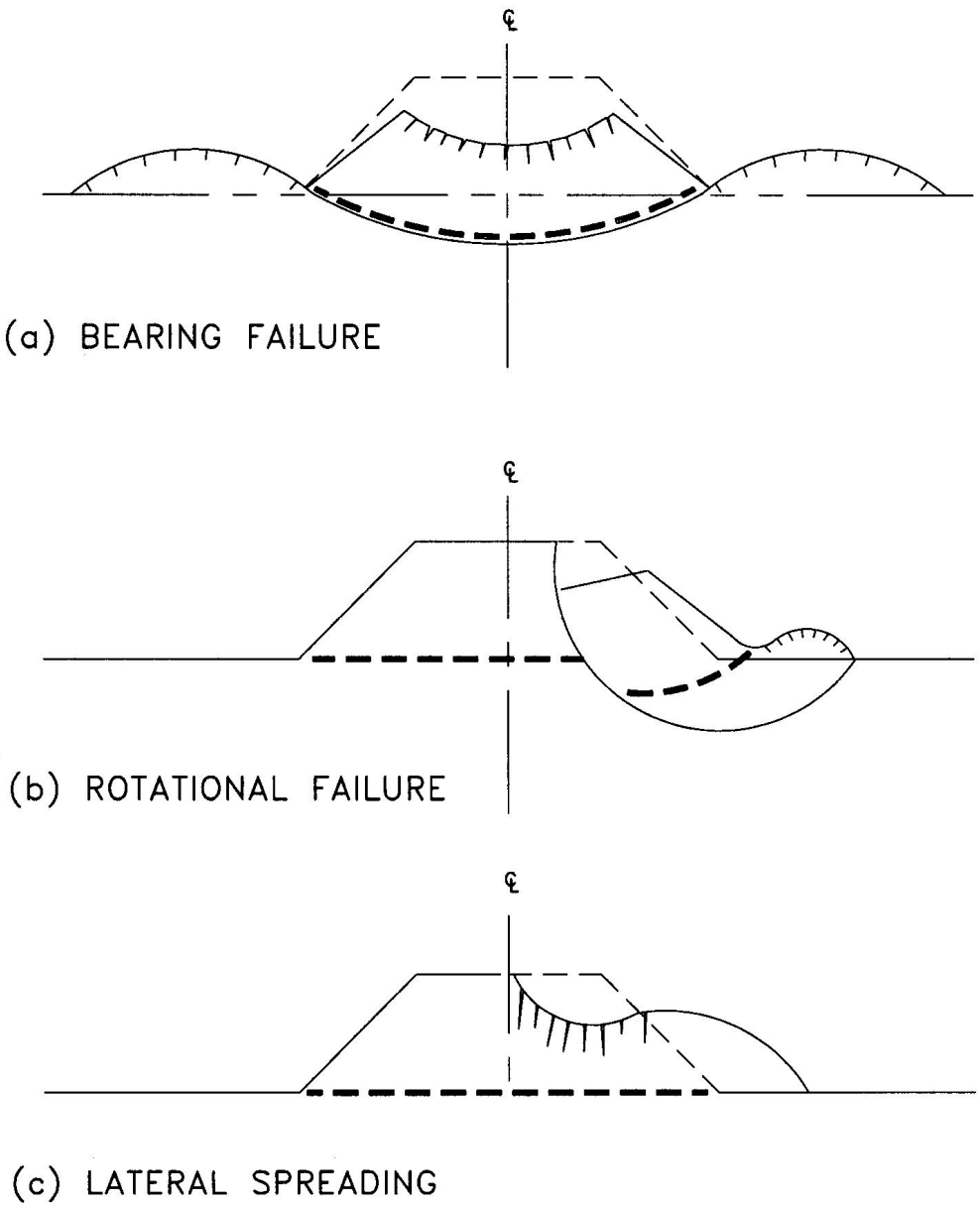

Figure 7-2. Reinforced embankments failure modes (after Haliburton et al., 1978b).

The calculations required for stability and settlement utilize conventional geotechnical design procedures modified only for the presence of the reinforcement.

The stability of an embankment over soft soil is usually determined by the *total stress* method of analysis, which is conservative since the analysis generally assumes that no strength gain occurs in the compressible soil. The stability analyses presented in this text uses the *total stress* approach, because it is simple and appropriate for reinforcement design (Holtz, 1989).

It is always possible to calculate stability in terms of the effective stresses using the *effective stress* shear strength parameters. However, this calculation requires an accurate estimate of the field pore pressures to be made during the project design phase. Additionally, high-quality, undisturbed samples of the foundation soils must be obtained and K_o consolidated-undrained triaxial tests conducted in order to obtain the required design soil parameters. Because the prediction of in-situ pore pressures in advance of construction is not easy, it is essential that field pore pressure measurements using high quality piezometers be made during construction to control the rate of embankment filling. Preloading and staged embankment construction are discussed in detail by Ladd (1991). Note that by taking into account the strength gain that occurs with controlled rate (e.g. staged) embankment construction, lower strength and therefore lower cost reinforcement can be utilized. However; the time required for construction may be significantly increased and the costs of the site investigation, laboratory testing, design analyses, field instrumentation, and inspection are also greater.

The *total stress* design steps and methodology are detailed in the following section.

[Note: The subjects of site investigation and laboratory testing, soil shear strength determination, and field instrumentation are addressed in detail in the following FHWA references: NHI-01-031 Subsurface Investigations - Geotechnical Site Characterization (NHI course No. 132031 reference manual{Mayne et al., 2002}); IF-02-034 Geotechnical Engineering Circular No. 5 Evaluation of Soil and Rock Properties (Sabatini, et al., 2002); NHI-06-088 Soils and Foundations Workshop (NHI course No. 132012 reference manual {Samtani and Nowatzki, 2006}); and HI-98-034 Geotechnical Instrumentation (NHI course No. 132041 reference manual {Dunnicliff, 1988}).]

7.3-2 Design Steps

The following is a step-by-step procedure for design of reinforced embankments. Additional comments on each step can be found in Section 7.3-3.

STEP 1. Define embankment dimensions and loading conditions.

A. Embankment height, H

B. Embankment length

C. Width of crest

D. Side slopes, b/H

E. External loads
1. surcharges
2. temporary (traffic) loads
3. dynamic loads

F. Environmental considerations
1. frost action
2. shrinkage and swelling
3. drainage, erosion, and scour

G. Embankment construction rate
1. project constraints
2. anticipated or planned rate of construction

STEP 2. Establish the soil profile and determine the engineering properties of the foundation soil.

A. From a subsurface soils investigation, determine
1. subsurface stratigraphy and soil profile
2. groundwater table (location, fluctuation)

B. Engineering properties of the subsoils
1. Undrained shear strength, c_u, for end of construction
2. Drained shear strength parameters, c' and ϕ', for long-term conditions
3. Consolidation parameters (C_c, C_r, c_v, σ_p')
4. Chemical and biological factors that may be detrimental to the reinforcement

C. Variation of properties with depth and areal extent

STEP 3. Obtain engineering properties of embankment fill materials.

A. Classification properties

B. Moisture-density relationships

C. Shear strength properties

D. Chemical and biological factors that may be detrimental to the reinforcement

STEP 4. Establish minimum appropriate factors of safety and operational settlement criteria for the embankment. Suggested minimum factors of safety are as follows.

A. Bearing capacity:
Overall bearing capacity: 2.0
Local bearing capacity (i.e., lateral squeeze type failure): 1.3 to 2.0

B. Global (rotational) shear stability at the end of construction: 1.3

C. Internal shear stability, long-term: 1.5

D. Lateral spreading (sliding): 1.5

E. Dynamic loading: 1.1

F. Settlement criteria: dependent upon project requirements

STEP 5. Check bearing capacity.

A. When the thickness of the soft soil is much greater than the width of the embankment, use classical bearing capacity theory:

$$q_{ult} = \gamma_{fill} H = c_u N_c \qquad [7\text{-}1]$$

where N_c, the bearing capacity factor, is usually taken as 5.14 -- the value for a strip footing on a cohesive soil of constant undrained shear strength, c_u, with depth. This approach may underestimate the bearing capacity of reinforced embankments, as discussed in Section 7.3-3.

B. When the soft soil is of limited depth, perform a *lateral squeeze* analysis (Section 7.3-3).

STEP 6. Check rotational shear stability.

Perform a rotational slip surface analysis on the unreinforced embankment and foundation to determine the critical failure surface and the factor of safety against local shear instability.

A. If the calculated factor of safety is greater than the minimum required, then reinforcement is not needed. Check lateral embankment spreading (Step 7).

B. If the factor of safety is less than the required minimum, then calculate the required reinforcement strength, T_g, to provide an adequate factor of safety using Figure 7-3 or alternative solutions (Section 7.3-3), where:

$$T_g = \frac{FS(M_D) - M_R}{R\cos(\theta - \beta)}$$

STEP 7. Check lateral spreading (sliding) stability.

Perform a lateral spreading or sliding wedge stability analysis (Figure 7-4).

$$FS = \frac{F_{resisting}}{F_{driving}} = \frac{\frac{1}{2} H\, b\, \gamma \tan\phi_f}{\frac{1}{2} K_a\, \gamma\, H^2} = \frac{b \tan\phi_f}{K_a\, H}$$

A. If the calculated factor of safety is greater than the minimum required, then reinforcement is not needed for this failure mode possibility.

B. If the factor of safety is inadequate, then determine the lateral spreading strength of reinforcement, T_{ls}, required -- see Figure 7-4b. Soil/geosynthetic cohesion, C_a, should be based on undrained direct shear tests on the soil/geosynthetic interface and assumed equal to 0 for extremely soft soils and low embankments. A cohesion value should be included with placement of the second and subsequent fills in staged embankment construction.

$$FS = \frac{2(b\,c_a + T_{ls})}{K_a\,\gamma\,H^2}$$

where:

- b = length of embankment side slope
- H = height of embankment
- K_a = coefficient of lateral earth pressure for embankment fill soil
- ϕ' = friction angle of embankment soil
- γ = unit weight of embankment soil
- ϕ_{sg} = embankment soil to geosynthetic interface friction angle
- c_u = cohesion (total stress) of foundation soil
- c_a = adhesion of foundation soil to geosynthetic reinforcement (Assume $c_a = 0$ for 1st stage loading on extremely soft soils.)

In absence of test data, the value of tan ϕ_{sg} may conservatively be taken as 2/3 tan ϕ'. In absence of test data, the value of c_a should be assumed to be 0.

C. Check sliding above the reinforcement. See Figure 7-4a.

$$FS = \frac{b \tan \phi_{sg}}{K_a\,H}$$

STEP 8. Establish tolerable geosynthetic deformation requirements and calculate the required reinforcement modulus, J, based on wide width (ASTM D 4595) tensile testing.

Reinforcement Modulus: $J = T_{ls} / \varepsilon_{geosynthetic}$ [7-2]

Recommendations for strain limits, based on type of fill soil materials and for construction over peats, are:

Cohesionless soil fills:	$\varepsilon_{geosynthetic}$ = 5 to 10%	[7-3]
Cohesive soil fills:	$\varepsilon_{geosynthetic}$ = 2%	[7-4]
Peat foundations:	$\varepsilon_{geosynthetic}$ = 2 to 10%	[7-5]

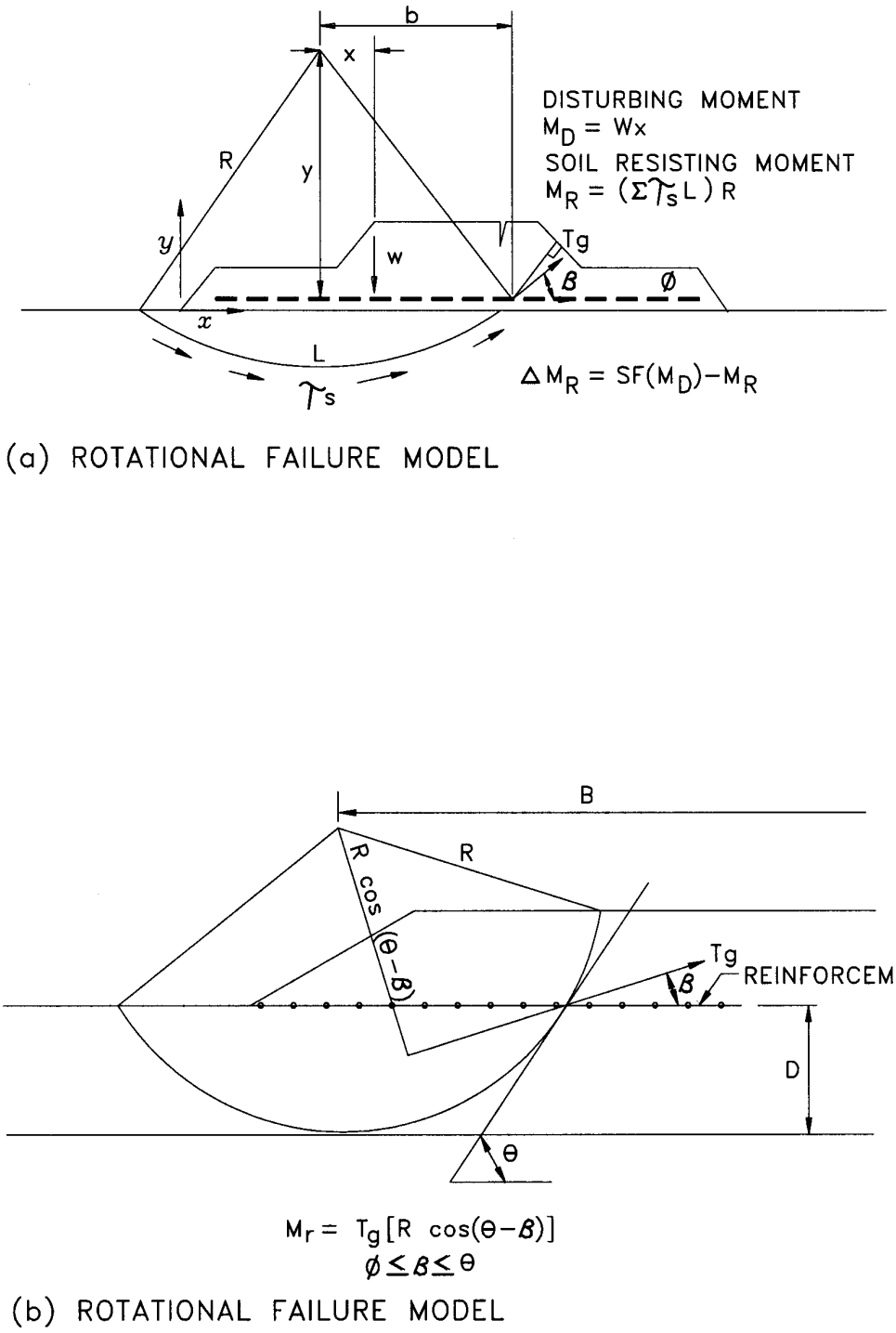

Figure 7-3. Reinforcement required to provide rotational stability (a) Christopher and Holtz (1985) after Wager (1981); (b) Bonaparte and Christopher (1987) for the case in which the reinforcement does not increase soil strength.

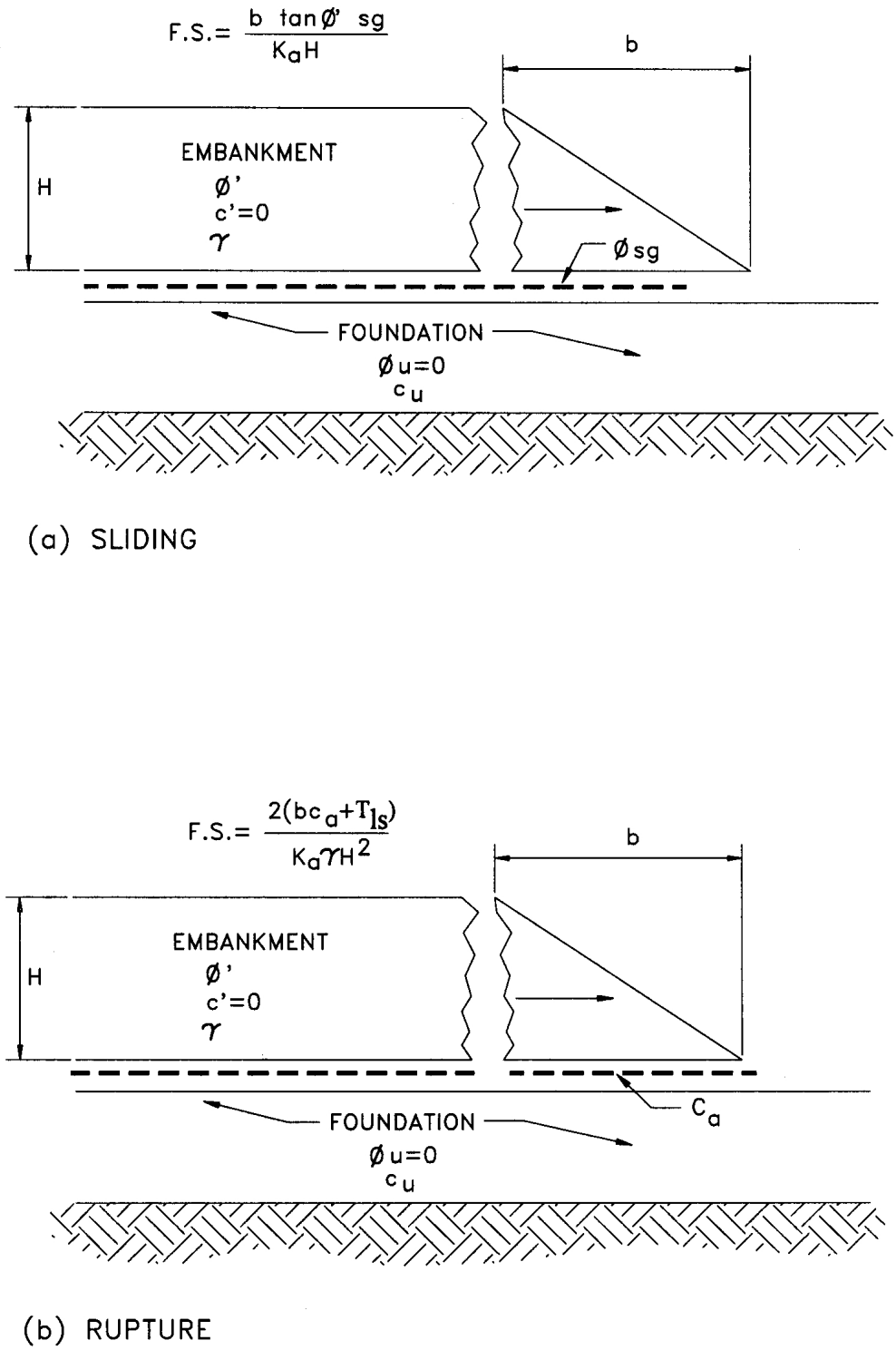

Figure 7-4. Reinforcement required to limit lateral embankment spreading (a) embankment sliding on reinforcement; (b) rupture of reinforcement and embankment sliding on foundation soil (Bonaparte and Christopher, 1987).

STEP 9. Establish geosynthetic strength requirements in the embankment's longitudinal direction (i.e., direction of the embankment alignment).

A. Check bearing capacity and rotational slope stability at the ends of the embankment (Steps 5 and 6).

B. Use strength and elongation determined from Steps 7 and 8 to control embankment spreading during construction and to control bending following construction.

C. As the strength of the seams transverse to the embankment alignment control strength requirements, geosynthetic seam strength requirements are the higher of the strengths determined from Steps 9.A or 9.B.

STEP 10. Establish geosynthetic properties (Section 7.4).

A. Design strengths and modulus are based on the ASTM D 4595 wide width tensile test. This test standard permits definition of tensile modulus in terms of: (i) initial tensile modulus; (ii) offset tensile modulus; or (iii) secant tensile modulus. Furthermore, the secant modulus may be defined between any two strain points. Geosynthetic modulus for design of embankments should be determined using a secant modulus, defined with the zero strain point and design strain limit (i.e., 2 to 10%) point.

B. Geotextile seam strength is quantified with the ASTM D 4884 test method, and is equal to the strength required in the embankment's longitudinal direction. Geogrid overlap strength, for longitudinal direction strength, is quantified with pullout testing (ASTM D 6706).

C. Soil-geosynthetic friction, ϕ_{sg}, based on ASTM D 5321 with on-site soils. For preliminary estimates, assume $\phi_{sg} = 2/3\phi$; for final design, testing is recommended.

D. Geotextile stiffness based on site conditions and experience. See Sect. 7.4-5.

E. Select survivability and constructability requirements for the geosynthetic based on site conditions, backfill materials, and equipment, using Tables 7-1, 7-2, and 7-3.

STEP 11. Estimate magnitude and rate of embankment settlement.

Use conventional geotechnical procedures and practices for this step.

STEP 12. Establish construction sequence and procedures.

See Section 7.8.

STEP 13. Establish construction observation requirements.

See Sections 7.8 and 7.9.

STEP 14. Hold preconstruction meetings.

Consider a *partnering* type contract with a disputes resolution board.

STEP 15. Observe construction and build with confidence (if the procedures outlined in these guidelines are followed!)

7.3-3 Comments on the Design Procedure

STEPS 1 and 2 need no further elaboration.

STEP 3. Obtain embankment fill properties.

Follow traditional geotechnical practice, except that the first few lifts of fill material just above the geosynthetic should be free-draining granular materials. This requirement provides the best frictional interaction between the geosynthetic and fill, as well as providing a drainage layer for excess pore water to dissipate from the underlying soils. Other fill materials may be used above this layer as long as the strain compatibility of the geosynthetic is evaluated with respect to the backfill materials (Step 8).

When a fill is placed on soft ground, the main driving force is from the weight of the embankment itself. It may be advantageous to use a lightweight fill material to reduce the driving forces, thereby increasing the overall global stability of the fill. The reduction in driving force will depend upon the type of lightweight fill material used. The geotechnical properties of various types of lightweight fill materials are discussed in detail in FWHA NHI-06-019 Ground Improvement Methods Reference

Manual – Volume I (Elias et al., 2006). A secondary benefit of the use of lightweight fill material is the reduction in settlement under loading. The amount of settlement will be reduced proportionately to the reduction in load.

STEP 4. Establish design factors of safety.

The minimum factors of safety previously stated are recommended for projects with modern state-of-the-practice geotechnical site investigations and laboratory testing. Those factors may be adjusted depending on the method of analysis, type and use of facility being designed, the known conditions of the subsurface, the quality of the samples and soils testing, the cost of failure, the probability of extreme events occurring, and the engineer's previous experience on similar projects and sites. In short, all of the uncertainties in loads, analyses, and soil properties influence the choice of appropriate factors of safety. Typical factors of safety for unreinforced embankments also seem to be appropriate for reinforced embankments.

When the calculated factor of safety is greater than 1 but less than the minimum allowable factor of safety for design, say 1.3 or 1.5, then the geosynthetic provides an additional factor of safety or a *second line of defense* against failure. On the other hand, when the calculated factor of safety for the unreinforced embankment is significantly less than 1, the geosynthetic reinforcement is the difference between success and failure. In this latter case, construction considerations (Section 7.8) become crucial to the project success.

Maximum tolerable post-construction settlement and embankment deformations, which depend on project requirements, must also be established.

STEP 5. Check overall bearing capacity.

<u>Overall Bearing</u>

Reinforcement does not increase the overall bearing capacity of the foundation soil. If the foundation soil cannot support the weight of the embankment, then the embankment cannot be built. Thus, the overall bearing capacity of the entire embankment must be satisfactory before considering any possible reinforcement. As such, the vertical stress due to the embankment can be treated as an average stress over the entire width of the embankment, similar to a semi-rigid mat foundation.

The bearing capacity can be calculated using classical soil mechanics methods (Terzaghi and Peck, 1967; Vesic, 1975; Perloff and Baron, 1976; and U.S. Navy,

1986), which use limiting equilibrium-type analyses for strip footings, assuming logarithmic spiral failure surfaces on an infinitely deep foundation. These analyses are not appropriate if the thickness of the underlying soft deposit is small compared to the width of the embankment. In this case, high lateral stresses in the confined soft stratum beneath the embankment could lead to a *lateral squeeze*-type failure. Use of reinforced soils slopes (Chapter 8) or of mechanically stabilized earth walls (Chapter 9) can lead to high lateral stresses in underlying soft foundation soils. See following discussion for guidance on assessing this failure mechanism.

In a review of 40 reinforced embankment case histories, Humphrey and Holtz (1986) and Humphrey (1987) found that in many cases, the failure height predicted by classical bearing capacity theory was significantly less than the actual constructed height, especially if high strength geotextiles and geogrids were used as the reinforcement. Figure 7-5 shows the embankment height versus average undrained shear strength of the foundation. Significantly, four embankments failed at heights of 6.6 ft. (2 m) greater than predicted by Equation 7-1 (line B in Figure 7-5). The two reinforced embankments that failed below line B were either on peat or under-reinforced (Humphrey, 1987). It appears that in many cases, the reinforcement enhances the beneficial effect the following factors have on stability:

- limited thickness or increasing strength with depth of the soft foundation soils (Rowe and Soderman, 1987 a and b; Jewell, 1988);
- the dry crust (Humphrey and Holtz, 1989);
- flat embankment side slopes (*e.g.*, Humphrey and Holtz, 1987); or
- dissipation of excess pore pressures during construction.

If the factor of safety for bearing capacity is sufficient, then continue with the next step. If not, consider increasing the embankment's width, flattening the slopes, adding toe berms, or improving the foundation soils by using stage construction and drainage enhancement or other alternatives, such as relocating the alignment or placing the roadway on an elevated structure.

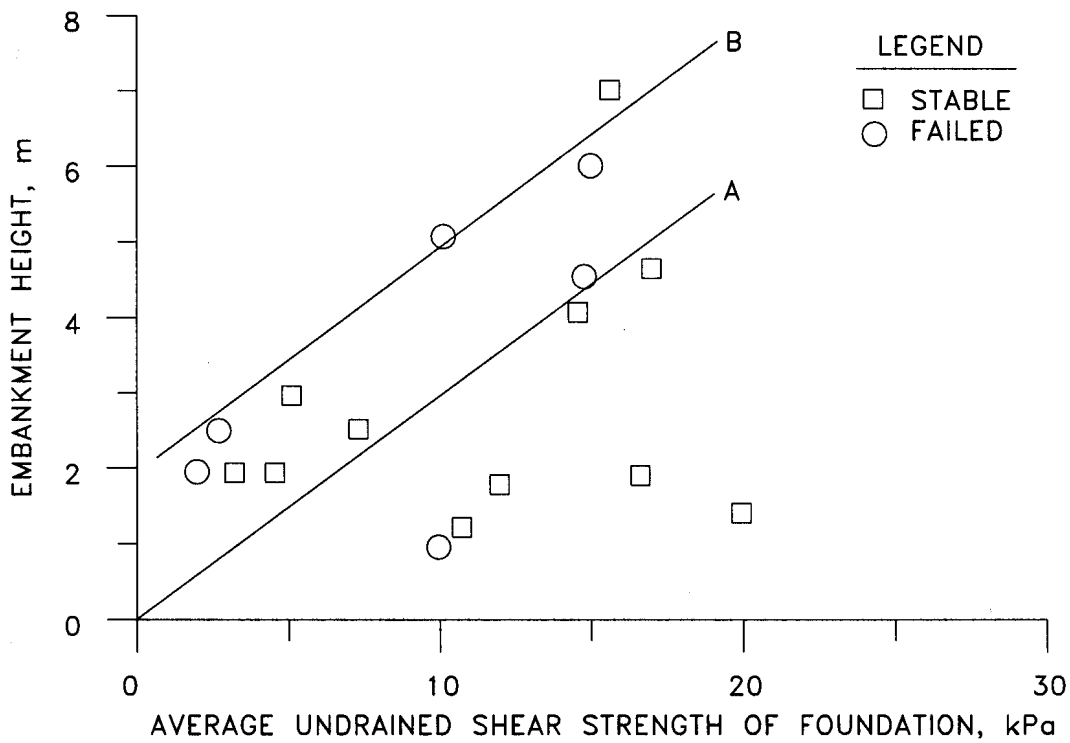

Figure 7-5. Embankment height versus undrained shear strength of foundation; line A: classical bearing capacity theory (Eq. 7-1); line B: line A + 6.6 ft. (2 m) (after Humphrey, 1987). 1 m = 3.3 ft.

Lateral Squeeze

High lateral stresses in a confined soft stratum beneath an embankment could lead to a *lateral squeeze*-type failure. Lateral squeeze-type failure of the foundation should be anticipated if γ_{fill} x $H_{fill} > 3c_u$, (see FHWA Soils and Foundation Manual, FHWA NHI-06-088 {Samtani and Nowatzki, 2006}) and a weak soil layer exists beneath the embankment to a depth that is less that the width of the embankment. The shear forces developed under the embankment should be compared to the corresponding shear strength of the soil. Approaches discussed by Jürgenson (1934), Silvestri (1983), and Bonaparte, Holtz and Giroud (1985), Rowe and Soderman (1987a), Hird and Jewell (1990), and Humphrey and Rowe (1991) are appropriate. The designer should be aware that the analysis for lateral squeeze is only approximate, and no single method is completely accepted by geotechnical engineers at present. When the depth of the soft layer, D_S, is greater than the base width of the embankment, general global bearing capacity and overall stability will govern the design.

The approach by Silvestri (1983) is presented and demonstrated below for lateral squeeze failure at the toe of an embankment side slope. If a weak soil layer exists beneath the embankment to a limited depth D_S which is less than the width of the slope b' (see Figure 7-6), the factor of safety against failure by squeezing may be calculated from:

$$FS_{squeezing} = \frac{2c_u}{\gamma D_s (\tan\theta)} + \frac{4.14c_u}{H\gamma} \geq 1.3 \qquad [7\text{-}6]$$

where:

θ = angle of slope.
γ = unit weight of soil in slope.
D_s = depth of soft soil beneath slope base of the embankment.
H = height of slope.
c_u = undrained shear strength of soft soil beneath slope.

Caution is advised and rigorous analysis (e.g, numerical modeling and/or extensive subsurface investigation with careful evaluation of c_u) should be performed when FS < 2. For factors of safety below 2, c_u should be confirmed through rigorous laboratory testing on undisturbed samples direct simple shear, evaluation of over consolidation ratio (e.g. Ladd, 1991), or triaxial compression with pore pressure measurements and/or field vane shear tests. Careful monitoring during construction will be required with piezometers, surface survey monuments (both within and outside the toe of the embankment), and inclinometers installed for construction control.

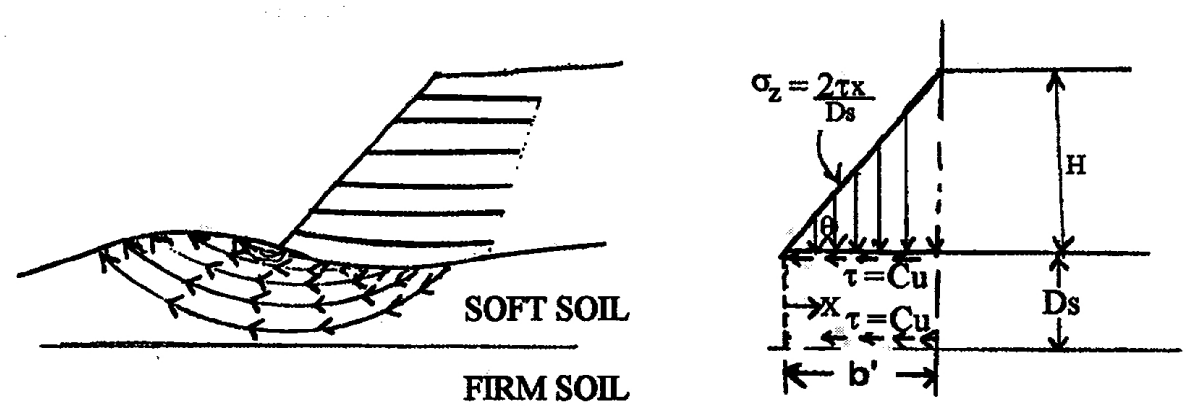

$$FS = \frac{2c_u}{\gamma D_s (\tan\theta)} + \frac{4.14c_u}{H\gamma}$$

Figure 7-6. Local bearing failure (lateral squeeze).

If the foundation soils are cohesive and limited to a depth of less than the base width of the embankment, then local stability should be evaluated. As an example, assume that the foundation soils had an undrained shear strength of 340 psf (16 kPa) and extended to a depth of 10 ft (3 m) at which point the granular soils were encountered, and the embankment fill unit weight is 120 lb/ft^3 (18.8 kN/m^3). Constructing even a 13 ft (4 m) high embankment with a 2H:1V side slope would create a problem in accordance with equation 7-6 as follows.

$$FS_{squeezing} = \frac{2c_u}{\gamma D_s (\tan\theta)} + \frac{4.14c_u}{H\gamma} \Rightarrow$$

$$FS_{squeezing} = \frac{2(170\,psf)}{(120\,lb/ft^3)(10\,ft)(\tan 26.6°)} + \frac{4.14(170\,psf)}{13\,ft(120\,lb/ft^3)} = 1.02$$

Since $FS_{squeezing}$ is lower than the recommended 1.3, the stability conditions must be improved. This could be accomplished by either reducing the slope angle, use of lightweight embankment fill, or by placing a surcharge at the toe (which effectively reduces the slope angle). In addition, if the resulting factor of safety is less than 2, refinement of the analysis should be considered as previously discussed (i.e., careful evaluation of c_u, consider performing numerical modeling, and install instrumentation for construction control).

STEP 6. Check rotational shear stability.

The next step is to calculate the factor of safety against a circular failure through the embankment and foundation using classical limiting equilibrium-type stability analyses. If the factor of safety does not meet the minimum design requirements (Step 4), then the reinforcing tensile force required to increase the factor of safety to an acceptable level must be estimated.

This is done by assuming that the reinforcement acts as a stabilizing tensile force at its intersection with the slip surface being considered. The reinforcement thus provides the additional resisting moment required to obtain the minimum required factor of safety. The analysis is shown in Figure 7-3.

The analysis consists of determining the most critical failure surface(s) using conventional limiting equilibrium analysis methods. For each critical sliding surface, the driving moment (M_D) and soil resisting moment (M_R) are determined as shown in

Figure 7-3a. The additional resisting moment ΔM_R to provide the required factor of safety is calculated as shown in Figure 7-3b. Then one or more layers of geotextiles or geogrids with sufficient tensile strength at tolerable strains (Step 7) are added at the base of the embankment to provide the required additional resisting moment. If multiple layers are used, they must be separated by a granular layer and they must have compatible stress-strain properties (*e.g.*, the same type of reinforcement must be used for each layer).

A number of procedures have been proposed for determining the required additional reinforcement, and these are summarized by Christopher and Holtz (1985), Bonaparte and Christopher (1987), Holtz (1990), and Humphrey and Rowe (1991). The basic difference in the approaches is in the assumption of the reinforcement force orientation at the location of the critical slip surface (the angle ß in Figures 7-3a and 7-3b). It is conservative to assume that the reinforcing force acts horizontally at the location of the reinforcement (ß = 0). In this case, the additional reinforcing moment is equal to the required geosynthetic strength, T_g, times the vertical distance, y, from the plane of the reinforcement to the center of rotation, or:

$$\Delta M_R = T_g\, y \qquad [7\text{-}6a]$$

as determined for the most critical failure surface, shown in Figure 7-3a. This approach is conservative because it neglects any possible reinforcement reorientation along the alignment of the failure surface, as well as any confining effect of the reinforcement.

A less-conservative approach assumes that the reinforcement bends due to local displacements of the foundation soils at the onset of failure, with the maximum possible reorientation located tangent to the slip surface (ß = θ in Figure 7-3b). In this case,

$$\Delta M_R = T_g\,[R \cos(\theta - \beta)] \qquad [7\text{-}6b]$$

where,

θ = angle from horizontal to tangent line as shown in Figure 7-3.

Limited field evidence indicates that it is actually somewhere in between the horizontal and tangential (Bonaparte and Christopher, 1987) depending on the foundation soils, the depth of soft soil from the original ground line in relation to the width of the embankment (D/B ratio), and the stiffness of the reinforcement. Based on the minimal information available, the following suggestions are provided for selecting the orientation:

$\beta = 0$	for brittle, strain-sensitive foundations soils (*e.g.*, leached marine clays) or where a crust layer is considered in the analysis for increased support;
$\beta = \theta/2$	for D/B < 0.4 and moderate to highly compressible soils (*e.g.*, soft clays, peats);
$\beta = \theta$	for D/B. 0.4 highly compressible soils (*e.g.*, soft clays, peats); and reinforcement with high elongation potential ($\epsilon_{design} \geq$ 10%), and large tolerable deformations; and
$\beta = 0$	when in any doubt!

Other approaches, as discussed by Bonaparte and Christopher (1987), require a more rigorous analysis of the foundation soils deformation characteristics and the reinforcement strength compatibility.

In each method, the depth of the critical failure surface must be relatively shallow, *i.e.*, y in Figure 7-3a must be large, otherwise the geosynthetic contribution toward increasing the resisting moment will be small. On the other hand, Jewell (1988) notes that shallow slip surfaces tend to underestimate the driving force in the embankment, and both he and Leshchinsky (1987) have suggested methods to address this problem.

STEP 7. Check lateral spreading (sliding) stability.

A simplified analysis for calculating the reinforcement required to limit lateral embankment spreading is illustrated in Figure 7-4. For unreinforced as well as reinforced embankments, the driving forces result from the lateral earth pressures developed within the embankment and which must, for equilibrium, be transferred to the foundation by shearing stresses (Holtz, 1990). Instability occurs in the embankment when either:

1. the embankment slides on the reinforcement (Figure 7-4a); or
2. the reinforcement fails in tension and the embankment slides on the foundation soil (Figure 7-4b).

In the latter case, the shearing resistance of the foundation soils just below the embankment is insufficient to maintain equilibrium. Thus, in both cases, the reinforcement must have sufficient friction to resist sliding on the reinforcement plane, and the geosynthetic tensile strength must be sufficient to resist rupture as the potential sliding surface passes through the reinforcement.

The forces involved in the analysis of embankment spreading are shown in Figure 7-4 for the two cases above. The lateral earth pressures, usually assumed to be active, are

a maximum at the crest of the embankment. The factor of safety against embankment spreading is found from the ratio of the resisting forces to the actuating (driving) forces. The recommended factor of safety against sliding is 1.5 (Step 4). If the required soil-geosynthetic friction angle is greater than that reasonably achieved with the reinforcement, embankment soils and subgrade, then the embankment slopes must be flattened or berms must be added. Sliding resistance can be increased by the soil improvement techniques mentioned above. Generally, however, there is sufficient frictional resistance between geotextiles and geogrids commonly used for reinforcement and granular fill. If this is the case, then the resultant lateral earth pressures must be resisted by the tension in the reinforcement.

In the case where an MSE or RSS structure is founded at the end of the embankment (but not supporting a bridge structure) the length b may be taken as the reinforcement length, L, of the MSE or RSS structure. An MSE or RSS structure should only be included at the end of an embankment after the foundation soil has been adequately improved (i.e., through surcharging) to support such structures or other ground improvement techniques are employed, such as stabilization berms, lightweight fill, etc.

STEP 8. Establish tolerable deformation requirements for the geosynthetic.

Excessive deformation of the embankment and its reinforcement may limit its serviceability and impair its function, even if total collapse does not occur. Thus, an analysis to establish deformation limits of the reinforcement must be performed. The most common way to limit deformations is to limit the allowable strain in the geosynthetic. This is done because the geosynthetic tensile forces required to prevent failure by lateral spreading are not developed without some strain, and some lateral movement must be expected. Thus, geosynthetic modulus is used to control lateral spreading (Step 7). The distribution of strain in the geosynthetic is assumed to vary linearly from zero at the toe to a maximum value beneath the crest of the embankment. This is consistent with the development of lateral earth pressures beneath the slopes of the embankment.

For the assumed linear strain distribution, the maximum strain in the geosynthetic will be equal to twice the average strain in the embankment. Fowler and Haliburton (1980) and Fowler (1981) found that an average lateral spreading of 5% was reasonable, both from a construction and geosynthetic property standpoint. If 5% is the average strain, then the maximum expected strain would be 10%, and the geosynthetic modulus would be determined at 10% strain (Equation 7-3). However,

it has been suggested that a modulus at 10% strain would be too large, and that smaller maximum values at, say 2 to 5%, are more appropriate. Additional discussion of geosynthetic deformation is given in Christopher and Holtz (1985 and 1989), Bonaparte, Holtz and Giroud (1985), Rowe and Mylleville (1989 and 1990), and Humphrey and Rowe (1991).

If cohesive soils are used in the embankment, then the modulus should be determined at 2% strain to reduce the possibility of embankment cracking (Equation 7-4). Of course, if embankment cracking is not a concern, then these limiting reinforcement strain values could be increased. Keep in mind, however, that if cracking occurs, no resistance to sliding is provided. Further, the cracks could fill with water, which would add to the driving forces.

STEP 9. Establish geosynthetic strength requirements in the longitudinal direction.

Most embankments are relatively long but narrow in shape. Thus, during construction, stresses are imposed on the geosynthetic in the longitudinal direction, *i.e.*, along the direction of the centerline. Reinforcement may be also required for loadings that occur at bridge abutments, and due to differential settlements and embankment bending, especially over nonuniform foundation conditions and at the edges of soft soil deposit.

Because both sliding and rotational failures are possible, analysis procedures discussed in Steps 6 and 7 should be applied, but in the direction along the alignment of the embankment. This determines the longitudinal strength requirements of the geosynthetic. Because the usual placement of the geosynthetic is in strips perpendicular to the centerline, the longitudinal stability will be controlled by the strength of the transverse seams.

STEP 10. Establish geosynthetic properties.

See Section 7.4 for a determining the required properties of the geosynthetic.

STEP 11. Estimate magnitude and rate of embankment settlement.

Although not part of the stability analyses, both the magnitude and rate of settlement of the embankment should be considered in any reinforcement design. There is some evidence from finite element studies that differential settlements may be reduced

somewhat by the presence of geosynthetic reinforcement. Long-term or consolidation settlements are not influenced by the geosynthetic, since compressibility of the foundation soils is not altered by the reinforcement, although the stress distribution may be somewhat different. Present recommendations provide for reinforcement design as outlined in Steps 6 - 10 above. Then use conventional geotechnical methods to estimate immediate, consolidation, and secondary settlements, as if the embankment was unreinforced (Christopher and Holtz, 1985).

Possible creep of reinforced embankments on soft foundations should be considered in terms of the geosynthetic creep rate versus the consolidation rate and strength gain of the foundation. If the foundation soil consolidates and gains strength at a rate faster than (or equal to) the rate the geosynthetic loses strength due to creep, there is no problem. Many soft soils such as peats, silts and clays with sand lenses have high permeability, therefore, they gain strength rapidly, but each case should be analyzed individually.

Time required for settlement can be substantially decreased with foundation drains. Consolidation of soft ground using vertical drains is a technique used since the 1920s. Today, the most common method is the use of *wick* drains, which can best be described as prefabricated vertical drains (PVDs), since drainage is via pressure, and not by wicking. PVDs are used to accelerate consolidation of soft saturated compressible soils under load. The most common use of PVDs is to accelerate consolidation for approach embankments at bridges or other embankment construction over soft soils, where the total post construction settlement is not acceptable.

When PVDs are used to accelerate settlement, the subsoil must meet the following criteria:

- Moderate to high compressibility.
- Low permeability.
- Full saturation.
- Final embankment loads must exceed maximum past pressure.
- Secondary consolidation must not be a major concern.
- Low-to-moderate shear strength.

The evaluation, design, cost, specification, and construction with PVDs are discussed in detail in FWHA NHI-06-019 Ground Improvement Methods Reference Manual – Volume I (Elias et al., 2006). Filtration of the PVD geotextile should be evaluated following the guidelines in Chapter 2 of this manual.

STEP 12. Establish construction sequence and procedures.

The importance of proper construction procedures for geosynthetic reinforced embankments on very soft foundations cannot be over emphasized. A specific construction sequence is usually required to avoid failures during construction.

See Section 7.8 for details on site preparation, special construction equipment, geosynthetic placement procedures, seaming techniques, and fill placement and compaction procedures.

STEP 13. Establish construction observation requirements

See Sections 7.8 and 7.9.

A. Instrumentation. As a minimum, install piezometers, settlement points, and surface survey monuments. Also consider inclinometers to observe lateral movement with depth.

   Note that the purpose of the instrumentation in soft ground reinforcement projects is not for research but to verify design assumptions and to control and, usually, expedite construction.

B. Geosynthetic inspection. Be sure field personnel understand:
   - geosynthetic submittal for acceptance prior to installation;
   - testing requirements;
   - fill placement procedures; and
   - seam integrity verification.

STEP 14. Hold preconstruction meetings

It has been our experience that the more potential contractors know about the overall project, the site conditions, and the assumptions and expectations of the designers, the more realistically they can bid; and, the project is more successful. Prebid and preconstruction information meetings with contractors have been very successful in establishing a good, professional working relationship between owner, design engineer, and contractor. *Partnering* type contracts and a disputes resolution board can also be used to reduce problems, claims, and litigation.

STEP 15. Observe construction

Inspection should be performed by a trained and knowledgeable inspector, and good documentation of construction should be maintained.

7.4 SELECTION OF GEOSYNTHETIC AND FILL PROPERTIES

Once the design strength requirements have been established, the appropriate geosynthetic must be selected. In addition to its tensile and frictional properties, drainage requirements, construction conditions, and environmental factors must also be considered. Geosynthetic properties required for reinforcement applications are given in Table 7-1. The selection of appropriate fill materials is also an important aspect of the design. When possible, granular fill is preferred, especially for the first few lifts above the geosynthetic.

Table 7-1. Geosynthetic Properties Required for Reinforcement Applications.

Criteria and Parameter	Property[1]
Design Requirements:	
a. Mechanical	
Tensile strength	Wide width strength
Tensile modulus	Wide width strength
Seam strength	Wide width strength
Tension creep	Tension creep
Soil-geosynthetic friction	Soil-geosynthetic friction angle
b. Hydraulic	
Piping resistance	Apparent opening size
Permeability	Permeability
Constructability Requirements:	
Tensile strength	Grab strength
Puncture resistance	Puncture resistance
Tear resistance	Trapezoidal tear
Longevity:	
UV stability (if exposed)	UV resistance
Soil compatibility (where required)	Chemical; Biological
NOTE: 1. See Table 1-3 for specific test procedures.	

7.4-1 Geotextile and Geogrid Strength Requirements

The most important mechanical properties are the tensile strength and modulus of the reinforcement, seam strength, soil-geosynthetic friction, and system creep resistance.

The tensile strength and modulus values should preferably be determined by an in-soil tensile test. From research by McGown, Andrawes, and Kabir (1982) and others, we know that in-soil properties of many geosynthetics are markedly different than those from tests conducted in air. However, in-soil tests are not yet routine nor standardized, and the test proposed test methods need additional work. The practical alternate is to conservatively use a representative (i.e., wide strip) tensile test as a measure of the in-soil strength. This point is discussed by Christopher and Holtz (1985) and Bonaparte, Holtz, and Giroud (1985).

Therefore, strength and modulus are based on testing of wide specimens. ASTM D 4595, Standard Test Method for Tensile Properties of Geotextiles by the Wide-Width Strip Method, is used for geotextiles, and ASTM D 6637 Standard Test Method for Determining Tensile Properties of Geogrids by the Single or Multi-Rib Tensile Method with Method B or C (wide specimen) is used for geogrids. These test standards permits definition of tensile modulus in terms of: (i) initial tensile modulus; (ii) offset tensile modulus; or (iii) secant tensile modulus. Furthermore, the secant modulus may be defined between any two strain points. Geosynthetic modulus for design of embankments should be determined using a secant modulus, defined with the zero strain point and design strain limit (i.e., 2 to 10%) point.

The following minimum criteria for tensile strength of geosynthetics are recommended.

1. For ordinary cases, determine the design tensile strength T_d (the larger of T_g and T_{ls}) and the required secant modulus at 2 to 10% strain.
2. The ultimate tensile strength T_{ult} obviously must be greater that the design tensile strength, T_d. Note that T_g includes an inherent safety factor against overload and sudden failure that is equal to the rotational stability safety factor. The tensile strength requirements should be increased to account for installation damage, depending on the severity of the conditions.
3. The strain of the reinforcement at failure should be at least 1.5 times the secant modulus strain to avoid brittle failure. For exceptionally soft foundations where the reinforcement will be subjected to very large tensile stresses during construction, the geosynthetic must have either sufficient strength to support the embankment itself, or the reinforcement and the embankment must be allowed to deform. In this case, an elongation at rupture of up to 50% may be acceptable. In either case, high tensile strength geosynthetics and special construction procedures (Section 7.8) are required.
4. If there is a possibility of tension cracks forming in the embankment or high

strain levels occurring during construction (such as might occur, for example, with cohesive embankments), the lateral spreading strength, T_{ls}, at 2% strain should be required.

5. The required lateral spreading strength, T_{ls}, should be increased to account for creep and installation damage as the creep potential of the geosynthetic depends on the creep potential of the foundation. If significant creep is expected in the foundation, the creep potential of the geosynthetic at design stresses should be evaluated, recognizing that strength gains in the foundation will reduce the creep potential. Installation damage potential will depend on the severity of the conditions.
6. Strength requirements must be evaluated and specified for both the machine and cross machine directions of the geosynthetic. Usually, the seam strength controls the cross machine geosynthetic strength requirements.

Depending on the strength requirements, geosynthetic availability, and seam efficiency, more than one layer of reinforcement may be necessary to obtain the required tensile strength. If multiple layers are used, a granular layer of 8 to 12 in. (200 to 300 mm) must be placed between each successive geosynthetic layer or the layers must be mechanically connected (*e.g.*, sewn) together. Also, the geosynthetics must be strain compatible; that is, the same type of geosynthetic should be used for each layer.

For soil-geosynthetic friction values, either direct shear or pullout tests should be utilized. If test values are not available, Bell (1980) recommends that for sand embankments, the soil-geosynthetic friction angle is from $^{2}/_{3}\phi$ up to the full ϕ of the sand. Since these early recommendations, a number of direct shear and pullout tests have been performed on both geogrids and geotextiles and the recommendations still apply. It is recommended that in the absence of tests, a soil-geosynthetic friction angle of 2/3 ϕ should be conservatively used for granular fill placed directly on the geosynthetic. For clay soils, friction tests are definitely warranted and should be performed under all circumstances.

The creep properties of geosynthetics in reinforced soil systems are not well established. In-soil creep tests are possible but are far from routine today. For design, it is recommended that the working stress be kept much lower than the creep limit of the geosynthetic. Values of 40 to 60% of the ultimate stress are typically satisfactory for this purpose. Live loads versus dead loads also must be taken into account. Short-term live loadings are much less detrimental in terms of creep than sustained dead loads. And finally, as discussed in Section 7.3-3 Step 11, the relative rates of deformation of the geosynthetic versus the consolidation and strength gain of the foundation soil must be considered. In most cases, creep is not an issue in reinforced embankment stability.

7.4-2 Drainage Requirements

The geosynthetic must allow for free vertical drainage of the foundation soils to reduce pore pressure buildup below the embankment. Pertinent geosynthetic hydraulic properties are piping resistance and permeability (Table 7-1). It is recommended that the permeability of the geosynthetic be at least 10 times that of the underlying soil. Permeability values could be based on consolidation tests and taken at initial load levels to simulate initial placement of fill. The opening size should be selected based on the requirements of Section 2.3. The opening size should be a maximum to reduce the risk of clogging, while still providing retention of the underlying soil.

7.4-3 Environmental Considerations

For most embankment reinforcement situations, geosynthetics have a high resistance to chemical and biological attack; therefore, chemical and biological compatibility is usually not a concern. However, in unusual situations such as very low (*i.e.*, < 3) or very high *(i.e.*, > 9) pH soils, or other unusual chemical environments -- such as in industrial areas or near mine or other waste dumps -- the chemical compatibility of the polymer(s) in the geosynthetic should be checked to assure it will retain the design strength at least until the underlying subsoil is strong enough to support the structure without reinforcement.

7.4-4 Constructability (Survivability) Requirements

In addition to the design strength requirements, the geotextile or geogrid must also have sufficient strength to survive construction. If the geotextile is ripped, punctured, or torn during construction, support strength for the embankment structure will be reduced and failure could result. Constructability property requirements are listed in Table 7-1. (These are also called survivability requirements.) Tables 7-2 and 7-3 were developed by Haliburton, Lawmaster, and McGuffey (1982) specifically for reinforced embankment construction with varying subgrade conditions, construction equipment, and lift thicknesses (see also Christopher and Holtz, 1985). The specific property values are provided in Table 7-4 and Table 7-5. The high and moderate class conditions are taken directly from survivability tables in Chapter 5 for road construction (e.g., Table 5-3 and 5-4 from AASHTO M-288 Specification (2006) for geotextiles and Table 5-5 for geogrids) and are equivalent to Class 1 and Class 2 geosynthetics, respectively. The very high class requires greater strength than the requirements in Chapter 5 due to the possibility of constructing embankments on uncleared subgrade, which is a much harsher condition than anticipated for roads. For all critical applications, high to very high survivability geotextiles and geogrids are recommended. As the construction of the first lift of the embankment is analogous to construction of a temporary haul road, survivability requirements discussed in Section 5.9 are also appropriate here.

Table 7-2. Required Degree of Geosynthetic Survivability as a Function of Subgrade Conditions And Construction Equipment.

SUBGRADE CONDITIONS	Construction Equipment and 6 to 12 in. (150 to 300 mm) Cover Material Initial Lift Thickness		
	Low Ground Pressure Equipment (≤ 4 psi) {≤ 30 kPa}	Medium Ground Pressure Equipment (> 4 psi, ≤ 8 psi) {>30 kPa, ≤ 60 kPa}	High Ground Pressure Equipment (> 8 psi) {>60 kPa}
Subgrade has been cleared of all obstacles except grass, weeds, leaves, and fine wood debris. Surface is smooth and level, and shallow depressions and humps do not exceed 6 in. (150 mm) in depth and height. All larger depressions are filled. Alternatively, a smooth working table may be placed.	Moderate/ Low	Moderate	High
Subgrade has been cleared of obstacles larger than small- to moderate-sized tree limbs and rocks. Tree trunks and stumps should be removed or covered with a partial working table. Depressions and humps should not exceed 18 in. (450 mm) in depth and height. Larger depressions should be filled.	Moderate	High	Very High
Minimal site preparation is required. Trees may be felled, delimbed, and left in place. Stumps should be cut to project not more than ~6 in. (150 mm) above subgrade. Geosynthetic may be draped directly over the tree trunks, stumps, large depressions and humps, holes, stream channels, and large boulders. Items should be removed only if, where placed, the Geosynthetic and cover material over them will distort the finished road surface.	High	Very High	Not Recommended

NOTES:
1. Recommendations are for 6 to 12 in. (150 to 300 mm) initial thickness. For other initial lift thickness:
   12 to 18 in. (300 to 450 mm): Reduce survivability requirement one level
   18 to 24 in. (450 to 600 mm): Reduce survivability requirement two levels
   > 24 in. (> 600 mm): Reduce survivability requirement three levels
2. For special construction techniques such as prerutting, increase survivability requirement one level.
3. Placement of excessive initial cover material thickness may cause bearing failure of soft subgrades.
4. Note that equipment used for embankment construction (even *High Ground Pressure* equipment) have significantly lower ground contact pressures than equipment used for roadway construction (Table 5-2).

Table 7-3. Required Degree of Geosynthetic Survivability as a Function of Cover Material and Construction Equipment.

CONSTRUCTION		COVER MATERIAL		
		Fine sand to ± 2 in. (50 mm) diameter gravel, rounded to subangular	Coarse aggregate with diameter up to one-half proposed lift thickness, may be angular	Some to most aggregate with diameter greater than one-half proposed lift thickness, angular and sharp-edged, few fines
6 to 12 in. (150 to 300 mm) Initial Lift Thickness	Low ground pressure equipment (4 psi) {30 kPa}	Moderate/Low	Moderate	High
	Medium ground pressure equipment (> 4 psi, ≤ 8 psi) {>30 kPa,≤60 kPa}	Moderate	High	Very High
12 to 18 in. (300 to 450 mm) Initial Lift Thickness	Medium ground pressure equipment (> 4 psi, ≤ 8 psi) {>30 kPa,≤60 kPa}	Moderate/Low	Moderate	High
	High ground pressure equipment (> 8 psi) {>60 kPa}	Moderate	High	Very High
18 to 24 in. (450 to 600 mm) Initial Lift Thickness	High ground pressure equipment (> 8 psi) {>60 kPa}	Moderate/Low	Moderate	High
> 24 in. (> 600 mm) Initial Lift Thickness	High ground pressure equipment (> 8 psi) {>60 kPa}	Moderate/Low	Moderate/Low	Moderate

NOTES:
1. For special construction techniques such as prerutting, increase geosynthetic survivability requirement one level.
2. Placement of excessive initial cover material thickness may cause bearing failure of soft subgrades.
3. Note that equipment used for embankment construction (even *High Ground Pressure* equipment) have significantly lower ground contact pressures than equipment used for roadway construction (Table 5-2).

Table 7-4. Minimum Geotextile Property Requirements[1,2,3] for Geotextile Survivability (after AASHTO, 2006)

Property	ASTM Test Method	Units	Required Degree of Geotextile Survivability		
			Very High	High	Moderate
Grab Strength	D 4632	N	(see Note 4)	1400	1100
Tear Strength	D 4533	N	(see Note 4)	500	400
Puncture Strength	D 6241	N	(see Note 4)	2750	2200

NOTES:
1. Acceptance of geotextile material shall be based on ASTM D 4759.
2. Acceptance shall be based upon testing of either conformance samples obtained using Procedure A of ASTM D 4354, or based on manufacturer's certifications and testing of quality assurance samples obtained using Procedure B of ASTM D 4354.
3. Minimum; use value in weaker principal direction. All numerical values represent minimum average roll value (*i.e.*, test results from any sampled roll in a lot shall meet or exceed the minimum values in the table). Lot samples according to ASTM D 4354.
4. Recommend survivability of candidate "Very High" survivability geotextile(s) be demonstrated on a field/project basis or the use of a "High" survivability geotextile as a sacrificial layer.

CONVERSION: 1 N = 0.225 lbf

7.4-5 Stiffness and Workability

For extremely soft soil conditions, geosynthetic stiffness or workability may be an important consideration. The *workability* of a geosynthetic is its ability to support workers during initial placement and sewing operations and to support construction equipment during the first lift placement. Workability is generally related to geosynthetic stiffness; however, stiffness evaluation techniques and correlations with field workability are very poor (Tan, 1990). The workability guidelines based on subgrade CBR (Christopher and Holtz, 1985) are satisfactory for CBR > 1.0. For very soft subgrades, much stiffer geosynthetics are required. Other aspects of field workability such as water absorption, bulk density, and fastening method (i.e., geotextile sewn seam or geogrid overlap) should also be considered, especially on very soft sites.

Table 7-5. Geogrid Survivability Property Requirements[1,2,3]

Property	Test Method	Units	Requirement	
SURVIVABILITY			Geogrid Class[4]	
			CLASS 1[5]	CLASS 2
Ultimate Multi-Rib Tensile Strength	ASTM D 6637	kN/m	18	12
Junction Strength[6]	GSI GRI GG2	N	110	110
Ultraviolet Stability (Retained Strength)	ASTM D 4355	%	50% after 500 hours of exposure	
OPENING CHARACTERISTICS				
Opening Size	Direct measure	mm	Opening Size > D_{50} of aggregate above geogrid	
Separation	ASTM D 422	mm	D_{85} of aggregate above geogrid < 5 D_{85} subgrade Other wise use separation geotextile with geogrid	

NOTES:

1. Acceptance of geogrid material shall be based on ASTM D 4759.
2. Acceptance shall be based upon testing of either conformance samples obtained using Procedure A of ASTM D 4354, or based on manufacturer's certifications and testing of quality assurance samples obtained using Procedure B of ASTM D 4354.
3. Minimum; use value in stronger principal direction for ultimate multi-rib tensile and retained strengths, and use value in weaker principal direction for junction strength. All numerical values represent minimum average roll value (*i.e.*, test results from any sampled roll in a lot shall meet or exceed the minimum values in the table). Lot samples according to ASTM D 4354.
4. Class 1 is considered a "High" survivability geogrid and Class 2 as a "Moderate" survivability geogrid. Recommend survivability of candidate "Very High" survivability geogrid(s) be demonstrated on a field/project basis or the use of a "High" survivability geogrid as a sacrificial layer in conditions requiring "Very High" survivability.
5. Default geogrid selection. The engineer may specify a Class 2 geogrid for moderate survivability conditions, see Table 5-2.
6. Junction strength requirements have not been fully supported by data, and until such data is established, manufacturers shall submit data from full scale installation damage tests in accordance with ASTM D 5818 documenting integrity of junctions. For soft soil applications, a minimum of 6 in. (150 mm) of cover aggregate shall be placed over the geogrid and a loaded dump truck used to traverse the section a minimum number of passes to achieve 4 in. (100 mm) of rutting. A photographic record of the geogrid after exhumation shall be provided, which clearly shows that junctions have not been displaced or otherwise damaged during the installation process.

7.4-6 Fill Considerations

The first lift of fill material just above the geosynthetic should be free-draining granular materials. This requirement provides the best frictional interaction between the geosynthetic and fill, as well as a drainage layer for excess pore water dissipation of the underlying soils. Other lower permeability, (preferably granular) fill materials may be used above this layer as long as the strain compatibility of the geosynthetic is evaluated with respect to the backfill material, as discussed in Section 7.3-3, Step 8.

Most reinforcement analyses assume that the fill material is granular. In fact, in the past the use of cohesive soils together with geosynthetic reinforcement has been discouraged. This may be an unrealistic restriction, although there are problems with placing and compacting cohesive earth fills on especially soft subsoils. Furthermore, the frictional resistance between geosynthetics and cohesive soils is problematic. It may be possible to use composite embankments. Cohesionless fill could be used for the first 18 to 36 in. (0.5 to 1 m); then the rest of the embankment could be constructed to grade with locally available materials.

7.5 DESIGN EXAMPLE

DEFINITION OF DESIGN EXAMPLE

- Project Description: A 4-lane highway is to be constructed over a peat bog. Alignment and anticipated settlement require construction of an embankment with an average height of 6.5 ft. See project cross section figure.

- Type of Structure: embankment supporting a permanent paved road

- Type of Application: geosynthetic reinforcement

- Alternatives:
  i) excavate and replace - wetlands do not allow;
  ii) lightweight fill - high cost;
  iii) stone columns - soils too soft;
  iv) drainage and surcharge - yes; or
  v) very flat (8H:1V) slope - right-of-way restriction

GIVEN DATA

- Geometry - as shown in project cross section figure

- Geosynthetic - geotextile (a geogrid also may be used for this example problem; however, this example represents an actual case history where a geotextile was used)

- Soils - subsurface exploration indicates c_u = 100 psf in weakest areas
  - soft soils are underlain by firmer soils of c_u = 500 psf
  - embankment fill soil will be sands and gravel
  - lightweight fill costs $250,000 more than sand/gravel

- Stability Stability analyses of the unreinforced embankment were conducted with the STABL computer program. The most critical condition for embankments on soft soils is end-of-construction case; therefore, UU (unconsolidated, undrained) soil shear strength values are used in analyses.

  - Results of the analyses:
    a. With 4:1 side slopes and sand/gravel fill (γ = 138 lb/ft^3), FS ≈ 0.72.
    b. Since FS was substantially less than 1 for 4H:1V slopes, flatter slopes were evaluated, even though additional right-of-way would be required. With 8:1 side slopes and sand/gravel fill (γ = 138 lb/ft^3), a FS ≈ 0.87 was computed.
    c. Light-weight fill (γ = 100 lb/ft^3) was also considered, with it, the FS varied between ≈ 0.90 to 1.15

  - Transportation Department required safety factors are:
    Fs_{min} > 1.5 for *long-term* conditions
    FS_{allow} ≈ 1.3 for *short-term* conditions

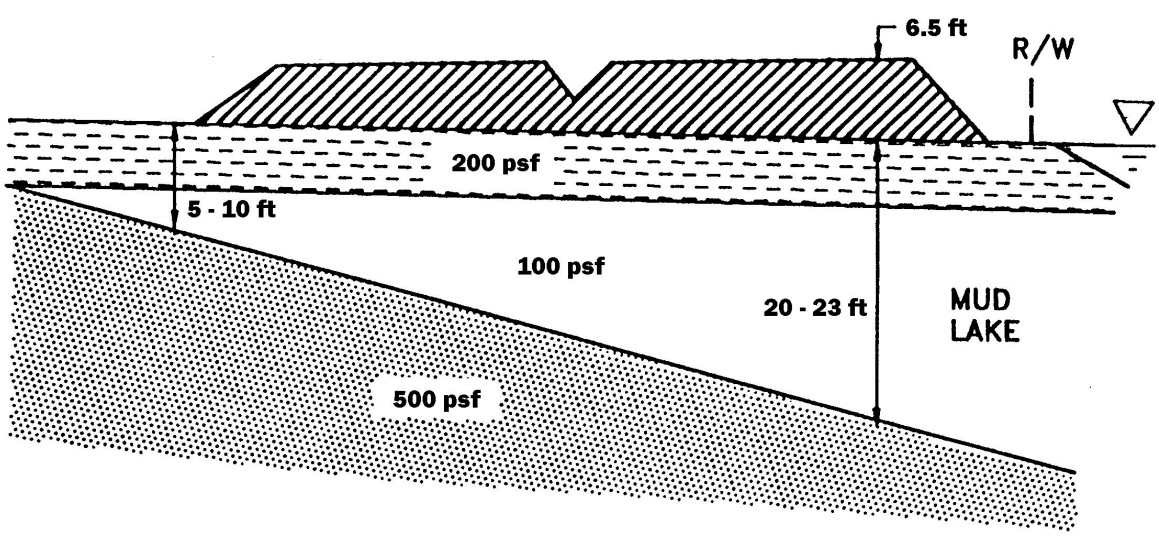

Project Cross Section

REQUIRED

Design geotextile reinforcement to provide a stable embankment.

DEFINE

A. Geotextile function(s):

B. Geotextile properties required:
C. Geotextile specification:

SOLUTION

A. Geotextile function(s):
Primary - reinforcement (for short-term conditions)
Secondary - separation and filtration

B. Geotextile properties required:
tensile characteristics
interface shear strength
survivability
apparent opening size (AOS)

DESIGN

Design embankment with geotextile reinforcement to meet short-term stability requirements.

STEP 1.DEFINE DIMENSIONS AND LOADING CONDITIONS

See project cross section figure.

STEP 2.SUBSURFACE CONDITIONS AND PROPERTIES

Undrained shear strength provided in given data. Design for end-of-construction. Long-term design with drained shear strength parameters not covered within this example.

STEP 3.EMBANKMENT FILL PROPERTIES

sand and gravel, with
$\gamma_m = 138$ lb/ft^3 $\phi' = 35°$

STEP 4.ESTABLISH DESIGN REQUIREMENTS

-Transportation Department required safety factors are:
$FS_{min} > 1.5$ for *long-term* conditions
$FS_{min} \approx 1.3$ for *short-term* conditions

- settlement

  Primary consolidation must be completed prior to paving roadway.

  A total fill height of 6.5 ft is anticipated to reach design elevation. **This height includes the additional fill material thickness to compensate for anticipated settlements.**

STEP 5.CHECK OVERALL BEARING CAPACITY

Recommended minimum safety factor (section 7.3-2) is 2.

A. Overall bearing capacity of soil, ignoring *footing* size is

$q_{ult} = c\ N_c$

$q_{ult} = 100$ psf x 5.14 = 514 psf

Considering depth of embedment (*i.e.*, shearing will have to occur through the embankment for a bearing capacity failure) the bearing capacity is more accurately computed (see Meyerhof) as follows.

$N_c = 4.14 + 0.5\ B/D$ where, B = the base width of the embankment (~ 100 ft), and

D = the average depth of the soft soil (~ 15 ft)

$N_c = 4.14 + 0.5\ (100\ ft / 15\ ft) = 7.5$

$q_{ult} = 100$ psf x 7.5 = 750 psf

maximum load, $P_{max} = \gamma_m H$

w/o a geotextile -

$P_{max} = 138\ lb/ft^3\ x\ 6.5\ ft = 900$ psf

implies FS = 750 / 900 = 0.83 NO GOOD

with a geotextile, and assuming that the geotextile will result in an even distribution of the embankment load over the width of the geotextile (*i.e.*, account for the slopes at the embankment edges),

$P_{avg} = A_E\ \gamma_m / B$ where, A = cross section area of embankment, and

B = base width of the embankment

$P_{avg} = \{[½\ (100\ ft + 50\ ft)\ 6.5\ ft]\ 138\ lb/ft^3\} / 100\ ft$

$P_{avg} = 672$ psf $< q_{ult}$ worst case Safety Factor Marginal

Add berms to increase bearing capacity. Berms, 10 ft wide, can be added within the existing right-of-way, increasing the base width to 120 ft. With this increase in width,

$N_c = 4.14 + 0.5\ (120\ ft / 15\ ft) = 8.14$

$q_{ult} = 100$ psf x 8.1 = 814 psf

and,

P_{avg} = 672 psf (100 / 120) = 560 psf
FS = 814 psf / 560 psf = 1.45 Safety Factor O.K.

B. Lateral squeeze

From FHWA Foundation Manual (Cheney and Chassie, 1993) -

If γ_{fill} x H_{fill} > 3c, then lateral squeeze of the foundation soil can occur. Since P_{max} = 900 psf is much greater than 3c, even considering the crust layer (c = 200 psf), a rigorous lateral squeeze analysis was performed using the method by Jürgeson (1934). In this method, the lateral stress beneath the toe of the embankment is determined through charts or finite element analysis and compared to the shear strength of the soil. This method indicated a safety factor of approximately 1 for the 100 ft base width. Adding the berm and extending the reinforcement to the toe of the berm decreases the potential for lateral squeeze as the lateral stress is reduced at the toe of the berm. The berms increased $FS_{SQUEEZZE}$ to greater than 1.5.

Also, comparing the reinforced design with Figure 7-5 indicates that the reinforced structure should be stable.

STEP 6.PERFORM ROTATIONAL SHEAR STABILITY ANALYSIS

Recommended minimum safety factor at end of construction (section 7.3-2) is 1.3.

The critical unreinforced failure surface is found through rotational stability methods. For this project, STABL4M was used and the critical, unreinforced surface FS = 0.72. As the soil supporting the embankment was highly compressible peat, the reinforcement was assumed to rotate such that β = θ (Figure 7-3 and Eq. 7-4b). Thus,

$$FS_{req} = \frac{M_R + T_g R}{M_D} \geq 1.3$$

$$T_g = \frac{1.3 M_D - M_R}{R}$$

therefore, $T_g^{\sim} \approx 18{,}000$ lb/ft

Feasible - yes. Geosynthetics are available which exceed this strength requirement, especially if multiple layers are used. For this project, an installation damage factor of approximately equal to 1.0, and 2 layers were used:

Bottom: 6,000 lb/ft
Top: 12,000 lb/ft

The use of 2 layers allowed the lower cost bottom material to be used over the full embankment plus berm width, while the higher strength and more expensive geotextile was only placed under the embankment section where it was required.

STEP 7.CHECK LATERAL SPREADING (SLIDING) STABILITY

Recommended minimum safety factor (section 7.3-2) is 1.5.

A. from Figure 7-4b:

$T = FS\ x\ P_A = FS\ x\ 0.5\ K_a\ \gamma_m\ H^2$

$T = 1.5\ (0.5)\ [\tan^2 (45 - 35/2)]\ (138\ lb/ft^3)\ (6.5\ ft)^2$

$T = 1185$ lb/ft

Use Reduction Factors (RF) = 3 for creep and 1 installation damage

therefore, $T_{ls} = 3560$ lb/ft

$T_{ls} < T_g$, therefore $T_{design} = T_g = 18{,}000$ kN/m

B. check sliding:

$$FS = \frac{b \tan \phi_{sg}}{K_a H}$$

$$\boldsymbol{FS = \frac{26\ ft \times \tan 23}{0.27 \times 6.5\ ft}}$$

FS > 6, OK

STEP 8.ESTABLISH TOLERABLE DEFORMATION (LIMIT STRAIN) REQUIREMENTS

For cohesionless sand and gravel over deformable peat use Є = 10%

STEP 9.EVALUATE GEOSYNTHETIC STRENGTH REQUIRED IN LONGITUDINAL DIRECTION

From Step 7,

use $T_L = T_{ls} = 53$ kN/m for reinforcement and seams in the cross machine (X-MD) direction

STEP 10.ESTABLISH GEOSYNTHETIC PROPERTIES

A. Design strength and elongation based upon ASTM D 4595

Ultimate tensile strength

$T_{d1} = T_{ult} \geq 6{,}000$ lb/ft in MD - Layer 1

$T_{d2} = T_{ult} \geq 12{,}000$ lb/ft in MD - Layer 2

$T_{ult} \geq 3{,}560$ lb/ft in X-MD - both layers

Reinforcement Modulus, J

$J = T_{ls} / 0.10 = 3{,}560$ lb/ft for limit strain of 10%

$J \geq 35{,}600$ lb/ft - MD and X-MD, both directions

B. seam strength

$T_{seam} \geq 3{,}560$ lb/ft with controlled fill placement

C. soil-geosynthetic adhesion

from testing, per ASTM D 5321, $\phi_{sg} \geq 23^{\circ}$

D. geotextile stiffness based upon site conditions and experience

E. survivability and constructability requirements

Assume:1. medium ground pressure equipment

2. 12 in. first lift

3. uncleared subgrade

Use a *Very High Survivability* geotextile (from Tables 7-2 and 7-3). Therefore, from Table 7-4, the survivability of candidate geotextile reinforcements shall be demonstrated on a field/project basis or a "High" survivability geotextile, meeting the minimum average roll values listed below, may be used as a sacrificial layer.

Property	ASTM Test Method	Minimum Strength	
Grab Strength	D 4632	1400 N	(315 lbs)
Tear Resistance	D 4533	500 N	(110 lbs)
Puncture Strength	D 6241	2750 N	(620 lbs)

Drainage and filtration requirements -

Need grain size distribution of subgrade soils

Determine:maximum AOS for retention

minimum $k_g > k_s$

minimum AOS for clogging resistance

Complete Steps 11 through 15 to finish design.

STEP 11.PERFORM SETTLEMENT ANALYSIS

STEP 12.ESTABLISH CONSTRUCTION SEQUENCE REQUIREMENTS

STEP 13.ESTABLISH CONSTRUCTION OBSERVATION REQUIREMENTS

STEP 14.HOLD PRECONSTRUCTION MEETING

STEP 15.OBSERVE CONSTRUCTION

7.6 SPECIFICATIONS

Because the reinforcement requirements for soft-ground embankment construction will be project and site specific, standard specifications, which include suggested geosynthetic properties, are not appropriate, and special provisions or a separate project specification must be used. The following examples, one for a geotextile reinforcement and another for geogrid reinforcement include most of the items that should be considered in a reinforced embankment project.

HIGH STRENGTH GEOTEXTILE FOR EMBANKMENT REINFORCEMENT

(from Washington Department of Transportation, October 27, 1997)

Description

This work shall consist of furnishing and placing construction geotextile in accordance with the details shown in the plans, these specifications, or as directed by the Engineer.

Materials

Geotextile and Thread for Sewing

The material shall be a woven geotextile consisting only of long chain polymeric filaments or yarns formed into a stable network such that the filaments or yarns retain their position relative to each other during handling, placement, and design service life. At least 95 percent by mass of the of the material shall be polyolefins or polyesters. The material shall be free from defects or tears. The geotextile shall be free of any treatment or coating which might adversely alter its hydraulic or physical properties after installation. The geotextile shall conform to the properties as indicated in Table 1.

Thread used shall be high strength polypropylene, polyester, or Kevlar thread. Nylon threads will not be allowed.

Geotextile Approval

Source Approval

The Contractor shall submit to the Engineer the following information regarding each geotextile proposed for use:

Manufacturer's name and current address,
Full Product name,
Geotextile structure, including fiber/yarn type, and
Geotextile polymer type(s).

If the geotextile source has not been previously evaluated, a sample of each proposed geotextile shall be submitted to the Olympia Service Center Materials Laboratory in Tumwater for evaluation. After the sample and required information for each geotextile type have arrived at the Olympia Service Center Materials Laboratory in Tumwater, a maximum of 14 calendar days will be required for this testing. Source approval will be based on conformance to the applicable values from Table 1. Source approval shall not be the basis of acceptance of specific lots of material unless the lot sampled can be clearly identified, and the number of samples tested and approved meet the requirements of WSDOT Test Method 914.

Geotextile Properties

Table 1. Properties for high strength geotextile for embankment reinforcement.

Property	Test Method[1]	Geotextile Property Requirements[2]
AOS	ASTM D4751	0.84 mm max. (#20 sieve)
Water Permittivity	ASTM D4491	0.02/sec. min.
Tensile Strength, min. in machine direction	ASTM D4595	(to be based on project specific design)
Tensile Strength, min. in x-machine direction	ASTM D4595	(to be based on project specific design)
Secant Modulus at 5% strain	ASTM D4595	(to be based on project specific design)
Seam Breaking Strength	ASTM D4884	(to be based on project specific design)
Puncture Resistance	ASTM D4833	330 N min.
Tear Strength, min. in machine and x-machine direction	ASTM D4533	330 N min.
Ultraviolet (UV) Radiation Stability	ASTM D4355	50% Strength Retained min., after 500 Hrs in weatherometer

[1] The test procedures are essentially in conformance with the most recently approved ASTM geotextile test procedures, except geotextile sampling and specimen conditioning, which are in accordance with WSDOT Test Methods 914 an 915, respectively. Copies of these test methods are available at the Olympia Service Center Materials Laboratory in Tumwater, Washington.
[2]All geotextile properties listed above are minimum average roll values (i.e., the test result for any sampled roll in a lot shall meet or exceed the values listed).

Geotextile Samples for Source Approval

Each sample shall have minimum dimensions of 1.5 meters by the full roll width of the geotextile. A minimum of 6 square meters of geotextile shall be submitted to the Engineer for testing. The geotextile machine direction shall be marked clearly on each sample submitted for testing. The machine direction is defined as the direction perpendicular to the axis of the geotextile roll.

The geotextile samples shall be cut from the geotextile roll with scissors, sharp knife, or other suitable method which produces a smooth geotextile edge and does not cause geotextile ripping or tearing. The samples shall not be taken from the outer wrap of the geotextile nor the inner wrap of the core.

Acceptance Samples

Samples will be randomly taken by the Engineer at the job site to confirm that the geotextile meets the property values specified.

Approval will be based on testing of samples from each lot. A "lot" shall be defined for the purposes of this specification as all geotextile rolls within the consignment (i.e., all rolls sent to the project site) which were produced by the same manufacturer during a continuous period of production at the same manufacturing plant and have the same product name. After the samples and manufacturer's certificate of compliance have arrived at the Olympia Service

Center Materials Laboratory in Tumwater, a maximum of 14 calendar days will be required for this testing. If the results of the testing show that a geotextile lot, as defined, does not meet the properties required in Table 1, the roll or rolls which were sampled will be rejected. Two additional rolls for each roll tested which failed from the lot previously tested will then be selected at random by the Engineer for sampling and retesting. If the retesting shows that any of the additional rolls tested do not meet the required properties, the entire lot will be rejected. If the test results from all the rolls retested meet the required properties, the entire lot minus the roll(s) which failed will be accepted. All geotextile which has defects, deterioration, or damage, as determined by the Engineer, will also be rejected. All rejected geotextile shall be replaced at no expense to the Contracting Agency.

Certificate of Compliance

The Contractor shall provide a manufacturer's certificate of compliance to the Engineer which includes the following information about each geotextile roll to be used:

Manufacturer's name and current address,
Full product name,
Geotextile structure, including fiber/yarn type,
Geotextile polymer type(s),
Geotextile roll number, and
Certified test results.

Approval Of Seams

If the geotextile seams are to be sewn in the field, the Contractor shall provide a section of sewn seam which can be sampled by the Engineer before the geotextile is installed.

The seam sewn for sampling shall be sewn using the same equipment and procedures as will be used to sew the production seams. The seam sewn for sampling must be at least 2 meters in length. If the seams are sewn in the factory, the Engineer will obtain samples of the factory seam at random from any of the rolls to be used. The seam assembly description shall be submitted by the Contractor to the Engineer and will be included with the seam sample obtained for testing. This description shall include the seam type, stitch type, sewing thread type(s), and stitch density.

Construction Requirements

Geotextile Roll Identification, Storage, and Handling

Geotextile roll identification, storage, and handling shall be in conformance to ASTM D 4873. During periods of shipment and storage, the geotextile shall be stored off the ground. The geotextile shall be covered at all times during shipment and storage such that it is fully protected from ultraviolet radiation including sunlight, site construction damage, precipitation, chemicals that are strong and acids or strong bases, flames including welding sparks, temperatures in excess of 70° C, and any other environmental condition that may damage the physical property values of the geotextile.

Preparation and Placement of the Geotextile Reinforcement

The area to be covered by the geotextile shall be graded to a smooth, uniform condition free from ruts, potholes, and protruding objects such as rocks or sticks. The Contractor may construct a working platform, up to 0.6 meters in thickness, in lieu of grading the existing ground surface. A working platform is required where stumps or other protruding objects which cannot be removed without excessively disturbing the subgrade are present. All stumps shall be cut flush with the ground surface and covered with at least 150 mm of fill before placement of the first geotextile

layer. The geotextile shall be spread immediately ahead of the covering operation. The geotextile shall be laid with the machine direction perpendicular or parallel to centerline as shown in Plans. Perpendicular and parallel directions shall alternate. All seams shall be sewn. Seams to connect the geotextile strips end to end will not be allowed, as shown in the Plans. The geotextile shall not be left exposed to sunlight during installation for a total of more than 14 calendar days. The geotextile shall be laid smooth without excessive wrinkles. Under no circumstances shall the geotextile be dragged through mud or over sharp objects which could damage the geotextile. The cover material shall be placed on the geotextile in such a manner that a minimum of 200 mm of material will be between the equipment tires or tracks and the geotextile at all times. Construction vehicles shall be limited in size and weight such that rutting in the initial lift above the geotextile is not greater than 75 mm deep, to prevent overstressing the geotextile. Turning of vehicles on the first lift above the geotextile will not be permitted. Compaction of the first lift above the geotextile shall be limited to routing of placement and spreading equipment only. No vibratory compaction will be allowed on the first lift.

Small soil piles or the manufacturer's recommended method shall be used as needed to hold the geotextile in place until the specified cover material is placed.

Should the geotextile be torn or punctured or the sewn joints disturbed, as evidenced by visible geotextile damage, subgrade pumping, intrusion, or roadbed distortion, the backfill around the damaged or displaced area shall be removed and the damaged area repaired or replaced by the Contractor at no expense to the Contracting Agency. The repair shall consist of a patch of the same type of geotextile placed over the damaged area. The patch shall be sewn at all edges.

If geotextile seams are to be sewn in the field or at the factory, the seams shall consist of two parallel rows of stitching, or shall consist of a J-seam, Type Ssn-1, using a single row of stitching. The two rows of stitching shall be 25 mm apart with a tolerance of plus or minus 13 mm and shall not cross, except for restitching. The stitching shall be a lock-type stitch. The minimum seam allowance, i.e., the minimum distance from the geotextile edge to the stitch line nearest to that edge, shall be 40 mm if a flat or prayer seam, Type SSa-2, is used. The minimum seam allowance for all other seam types shall be 25 mm. The seam, stitch type, and the equipment used to perform the stitching shall be as recommended by the manufacturer of the geotextile and as approved by the Engineer.

The seams shall be sewn in such a manner that the seam can be inspected readily by the Engineer or his representative. The seam strength will be tested and shall meet the requirements stated in this Specification.

Embankment construction shall be kept symmetrical at all times to prevent localized bearing capacity failures beneath the embankment or lateral tipping or sliding of the embankment. Any fill placed directly on the geotextile shall be spread immediately. Stockpiling of fill on the geotextile will not be allowed.

The embankment shall be compacted using Method B of Section 2-03.3(14)C. Vibratory or sheepsfoot rollers shall not be used to compact the fill until at least 0.5 meters of fill is covering the bottom geotextile layer and until at least 0.3 meters of fill is covering each subsequent geotextile layer above the bottom layer.

The geotextile shall be pretensioned during installation using either Method 1 or Method 2 as described herein. The method selected will depend on whether or not a mudwave forms during placement of the first one or two lifts. If a mudwave forms as fill is pushed onto the first layer of

geotextile, Method 1 shall be used. Method 1 shall continue to be used until the mudwave ceases to form as fill is placed and spread. Once mudwave formation ceases, Method 2 shall be used until the uppermost geotextile layer is covered with a minimum of 0.3 meters of fill. These special construction methods are not needed for fill construction above this level. If a mudwave does not form as fill is pushed onto the first layer of geotextile, then Method 2 shall be used initially and until the uppermost geotextile layer is covered with at least 0.3 meters of fill.

Method 1
After the working platform, if needed, has been constructed, the first layer of geotextile shall be laid in continuous transverse strips and the joints sewn together. The geotextile shall be stretched manually to ensure that no wrinkles are present in the geotextile. The fill shall be end-dumped and spread from the edge of the geotextile. The fill shall first be placed along the outside edges of the geotextile to form access roads. These access roads will serve three purposes: to lock the edges of the geotextile in place, to contain the mudwave, and to provide access as needed to place fill in the center of the embankment. These access roads shall be approximately 5 meters wide. The access roads at the edges of the geotextile shall have a minimum height of 0.6 meters when completed. Once the access roads are approximately 15 meters in length, fill shall be kept ahead of the filling operation, and the access roads shall be kept approximately 15 meters ahead of this filling operation as shown in the Plans. Keeping the mudwave ahead of this filling operation and keeping the edges of the geotextile from moving by use of the access roads will effectively pre-tension the geotextile. The geotextile shall be laid out no more than 6 meters ahead of the end of the access roads at any time to prevent overstressing of the geotextile seams.

Method 2
After the working platform, if needed, has been constructed, the first layer of geotextile shall be laid and sewn as in Method 1. The first lift of material shall be spread from the edge of the geotextile, keeping the center of the advancing fill lift ahead of the outside edges of the lift as shown in the Plans. The geotextile shall be manually pulled taut prior to fill placement. Embankment construction shall continue in this manner for subsequent lifts until the uppermost geotextile layer is completely covered with 0.3 meters of compacted fill.

Measurement
High strength geotextile for embankment reinforcement will be measured by the square meter for the ground surface area actually covered.

Payment
The unit contract price per square meter for "High Strength Geotextile For Embankment Reinforcement", shall be full pay to complete the work as specified.

7.7 COST CONSIDERATIONS

The cost analysis for a geosynthetic reinforced embankment includes:

1. Geosynthetic cost: including purchase price, factory prefabrication, and shipping.
2. Site preparation: including clearing and grubbing, and working table preparation.

3. Geosynthetic placement: related to field workability (see Christopher and Holtz, 1989),
   a) with no working table, or
   b) with a working table.
4. Fill material: including purchasing, hauling, dumping, compaction, allowance for additional fill due to embankment subsidence. (NOTE: Use free-draining granular fill for the lifts adjacent to geosynthetic to provide good adherence and drainage.)

7.8 CONSTRUCTION PROCEDURES

The construction procedures for reinforced embankments on soft foundations are extremely important. *Improper* fill placement procedures can lead to geosynthetic damage, nonuniform settlements, and even embankment failure. By the use of low ground pressure equipment, a properly selected geosynthetic, and proper procedures for placement of the fill, these problems can essentially be eliminated. Essential construction details are outlined below. The Washington State DOT Special Provision (see Section 7.6) provides additional details.

A. Prepare subgrade:
   1. Cut trees and stumps flush with ground surface.
   2. Do not remove or disturb root or meadow mat.
   3. Leave small vegetative cover, such as grass and reeds, in place.
   4. For undulating sites or areas where there are many stumps and fallen trees, consider a working table for placement of the reinforcement. In this case, a lower strength sacrificial geosynthetic designed only for constructability can be used to construct and support the working table.

B. Geosynthetic placement procedures:
   1. Orient the geosynthetic with the machine direction perpendicular to the embankment alignment. No seams should be allowed parallel to the alignment. Therefore,
      - The geosynthetic rolls should be shipped in unseamed machine direction lengths equal to one or more multiples of the embankment design base width.
      - The geosynthetic should be manufactured with the largest machine width possible.
      - These widths should be factory-sewn to provide the largest width compatible with shipping and field handling.

2. Unroll the geosynthetic as smoothly as possible transverse to the alignment. (Do not drag it.)

3. Geotextiles should be sewn as required with all seams up and every stitch inspected. Geogrids may be joined to hold adjacent rolls together or maintain overlaps by ties, clamps, cables, etc.

4. The geosynthetic should be manually pulled taut to remove wrinkles. Weights (sand bags, tires, etc.) or pins may be required to prevent lifting by wind.
5. Before covering, the Engineer should examine the geosynthetic for holes, rips, tears, etc. Defects, if any, should be repaired by.
    - Large defects, should be replaced by cutting along the panel seam and sewing in a new panel.
    - Smaller defects, can be cut out and a new panel resewn into that section, if possible.
    - Defects less than 6 in. (150 mm), can be overlapped a minimum of 3 feet (1 m) or more in all directions from the defective area. (Additional overlap may be required, depending on the geosynthetic-to-geosynthetic friction angle).

    NOTE: If a *weak link* exists in the geosynthetic, either through a defective seam or tear, the system will tell the engineer about it in a dramatic way -- spectacular failure! (Holtz, 1990)

C. Fill placement, spreading, and compaction procedures:

1. Construction sequence for extremely soft foundations (when a mudwave forms) is shown in Figure 7-7.
    a. End-dump fill along edges of geosynthetic to form toe berms or access roads.
        - Use trucks and equipment compatible with constructability design assumptions (Table 7-1).
        - End-dump on the previously placed fill; do not dump directly on the geosynthetic.
        - Limit height of dumped piles, *e.g.*, to less than 3 feet (1 m) above the geosynthetic layer, to avoid a local bearing failure. Spread piles immediately to avoid local depressions.
        - Use lightweight dozers and/or front-end loaders to spread the fill.

- Toe berms should extend one to two panel widths ahead of the remainder of the embankment fill placement.

b. After constructing the toe berms, spread fill in the area between the toe berms.
    - Placement should be parallel to the alignment and symmetrical from the toe berm inward toward the center to maintain a *U*-shaped leading edge (concave outward) to contain the mudwave (Figure 7-8).

c. Traffic on the first lift should be parallel to the embankment alignment; no turning of construction equipment should be allowed.
    - Construction vehicles should be limited in size and weight to limit initial lift rutting to 3 in. (75 mm). If rut depths exceed 3 in. (75 mm), decrease the construction vehicle size and/or weight.

d. The first lift should be compacted only by *tracking in place* with dozers or end-loaders.

e. Once the embankment is at least 24 in. (600 mm) above the original ground, subsequent lifts can be compacted with a smooth drum vibratory roller or other suitable compactor. If localized liquefied conditions occur, the vibrator should be turned off and the weight of the drum alone should be used for compaction. Other types of compaction equipment also can be used for nongranular fill.

2. After placement, the geosynthetic should be covered within 48 hours.

For less severe foundation conditions (*i.e.*, when no mudwave forms):

a. Place the geosynthetic with no wrinkles or folds; if necessary, manually pull it taut prior to fill placement.

b. Place fill symmetrically from the center outward in an inverted *U* (convex outward) construction process, as shown in Figure 7-9. Use fill placement to maintain tension in the geosynthetic.

c. Minimize pile heights to avoid localized depressions.

d. Limit construction vehicle size and weight so initial lift rutting is no greater than 3 in. (75 mm).

e. Smooth-drum or rubber-tired rollers may be considered for compaction of first lift; however, do not overcompact. If weaving or localized quick conditions are observed, the first lift should be compacted by tracking with construction equipment.

D. Construction monitoring:

1. Monitoring should include piezometers to indicate the magnitude of excess pore pressure developed during construction. If excessive pore pressures are observed, construction should be halted until the pressures drop to a predetermined safe value.

2. Settlement plates should be installed at the geosynthetic level to monitor settlement during construction and to adjust fill requirements appropriately.

3. Inclinometers should be considered at the embankment toes to monitor lateral displacement.

Photographs of reinforced embankment construction are shown in Figure 7-10.

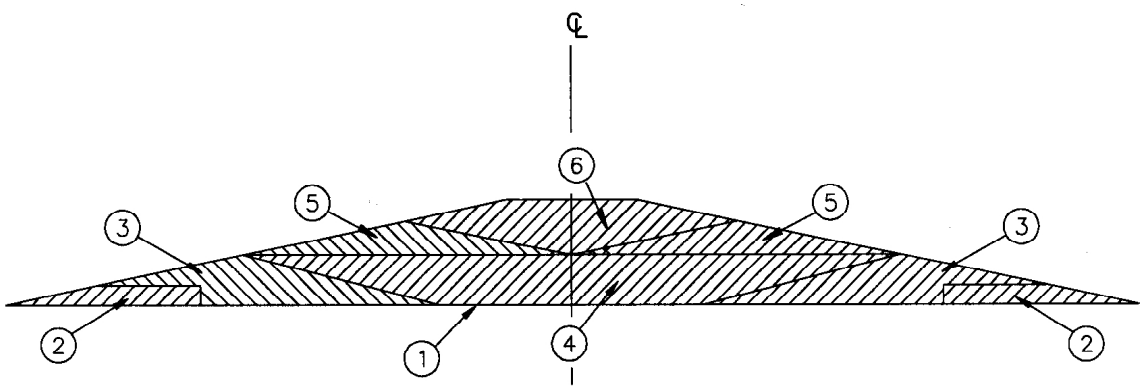

SEQUENCE OF CONSTRUCTION

1. LAY GEOSYNTHETIC IN CONTINUOUS TRAVERSE STRIPS, SEW STRIPS TOGETHER.
2. END DUMP ACCESS ROADS.
3. CONSTRUCT OUTSIDE SECTIONS TO ANCHOR GEOSYNTHETIC.
4. CONSTRUCT OUTSIDE SECTION TO "SET" GEOSYNTHETIC.
5. CONSTRUCT INTERIOR SECTIONS TO TENSION GEOSYNTHETIC.
6. CONSTRUCT FINAL CENTER SECTION

Figure 7-7. Construction sequence for geosynthetic reinforced embankments for extremely weak foundations (from Haliburton, Douglas and Fowler, 1977).

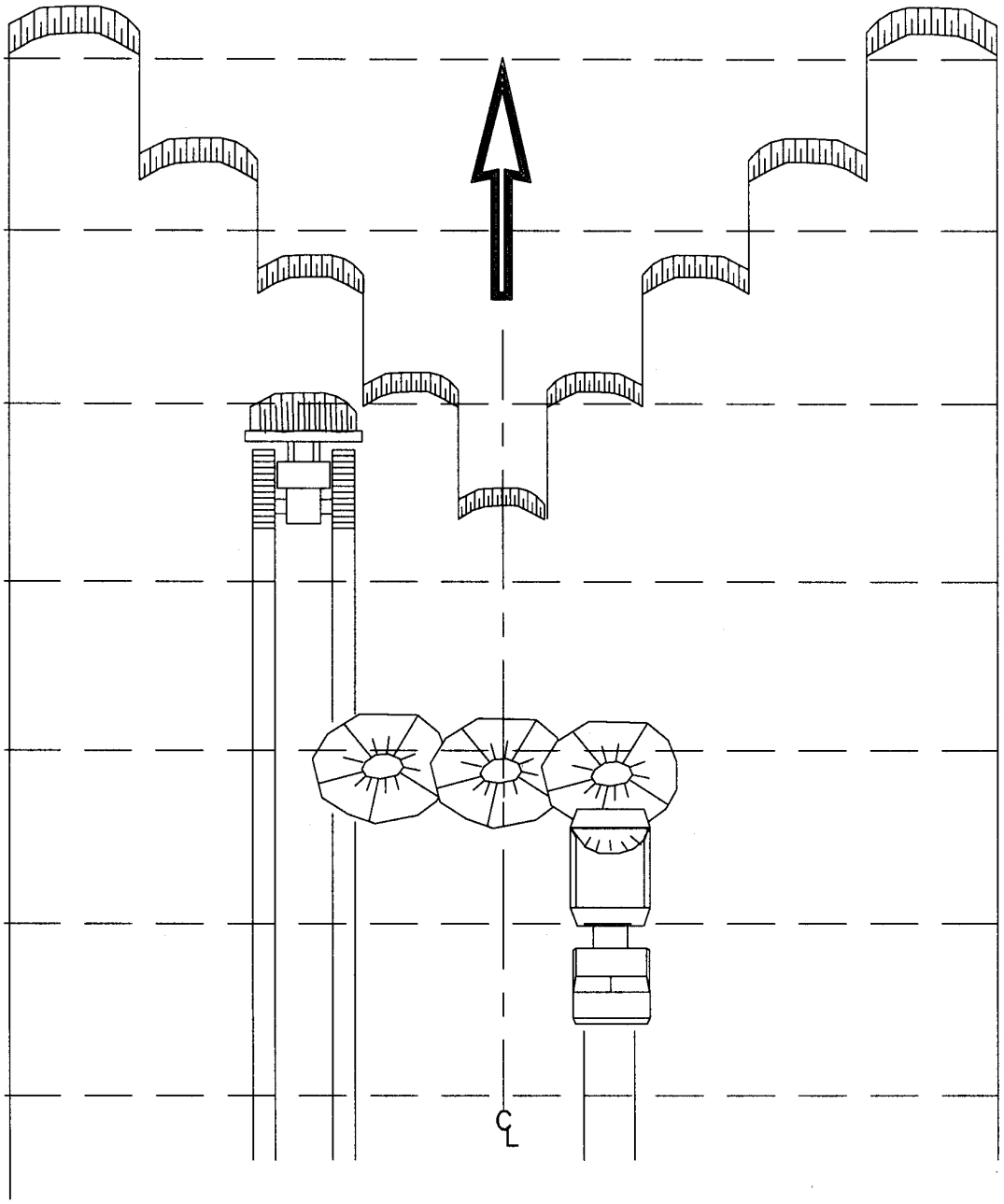

Figure 7-8. Placement of fill between toe berms on extremely soft foundations (CBR < 1) with a mud wave anticipated.

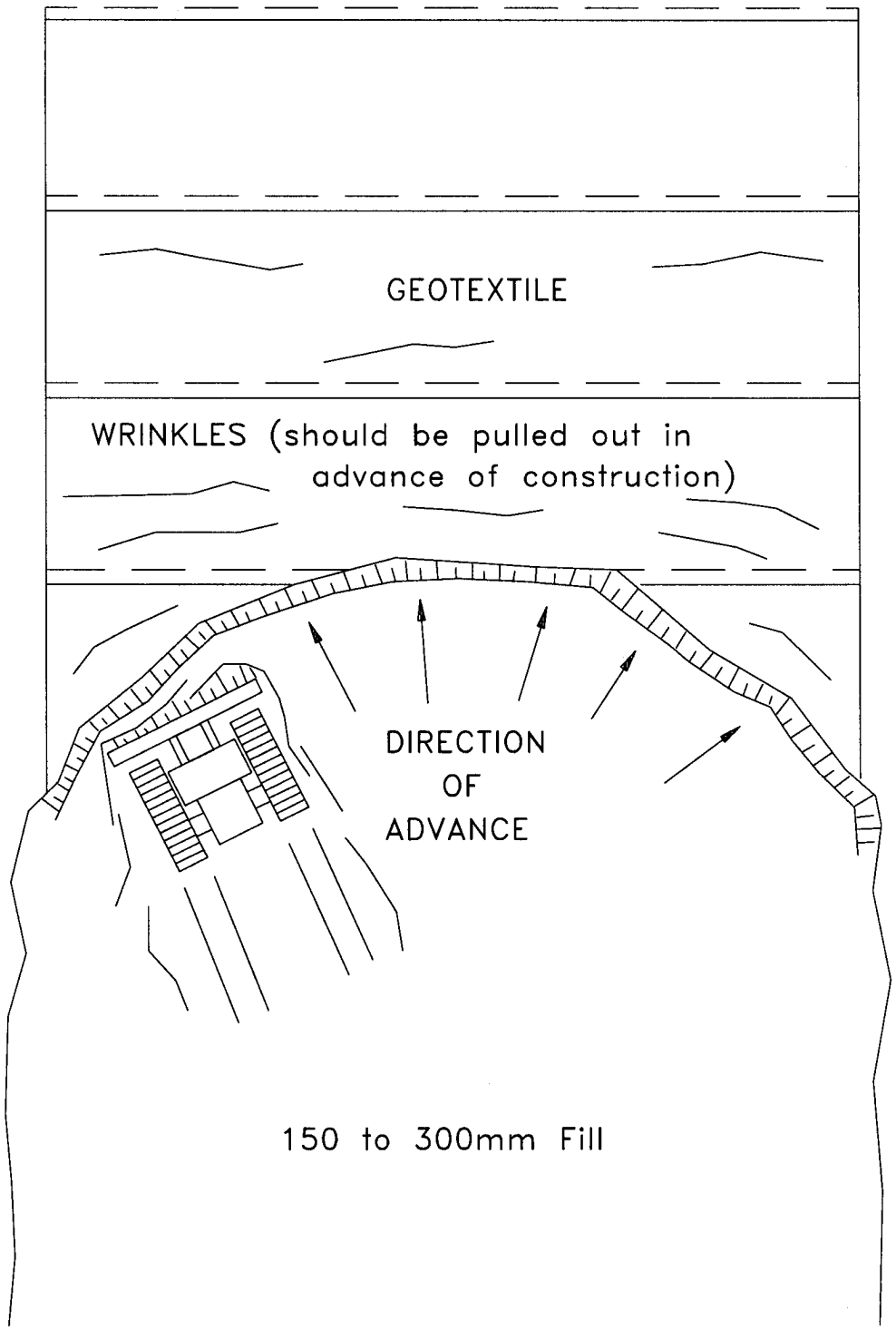

Figure 7-9. Fill placement to tension geotextile on moderate ground conditions; moderate subgrade (CBR > 1); no mud wave.

(a)

(b)

(c)

Figure 7-10. Reinforced embankment construction; a) geosynthetic placement; b) fill dumping; and c) fill spreading.

7.9 INSPECTION

Since implemented construction procedures are crucial to the success of reinforced embankments on very soft foundations, competent and professional construction inspection is absolutely essential. Field personnel must be properly trained to observe every phase of the construction and to ensure that (1) the specified material is delivered to the project, (2) the geosynthetic is not damaged during construction, and (3) the specified sequence of construction operations are explicitly followed. Field personnel should review the checklist in Section 1.7.

7.10 REINFORCED EMBANKMENTS FOR ROADWAY WIDENING

Special considerations are required for widening of existing roadway embankments founded on soft foundations. Construction sequencing of fill placement, connection of the geosynthetic to the existing embankment, and settlements of both the existing and new fills must be addressed by the design engineer. Analytical techniques for geosynthetic reinforcement requirements are the same as those discussed in Section 7.3.

Two example roadway widening cross sections are illustrated in Figure 7-11. The addition of a vehicle lane on either side of an existing roadway (Figure 7-11a) is feasible if the traffic can be detoured during construction. In this case, the reinforcement may be placed continuously across the existing embankment and beneath the two new outer fill sections. Placing both new lanes to one side of the embankment (Figure 7-11b) may allow for maintaining one lane of traffic flow during construction. With the new fill placed to one side of the existing embankment, the anchorage of the geosynthetic into the existing embankment becomes an important design step.

Both the new fill sections and the existing fill sections will most likely settle during and after fill placement, although the amount of settlement will be greater for the new fill sections. The existing fills settle because of the influence of the new, adjacent fill loads on their foundation soils. The amount of settlements is a function of the foundation soils and amount of load (fill height). When fill is placed to one side of an embankment (Figure 7-11b) the pavement may need substantial maintenance during construction and until settlements are nearly complete. Alternatively, light-weight fill could be used to reduce the settlement of the new fill and existing sections.

Note that the sections in Figure 7-11 do not indicate a geosynthetic reinforcement layer beneath the existing embankment section. Typically, the reinforcement for the embankment widening section would be designed assuming no contribution of existing section geosynthetic in reinforcing the new and combined sections. Therefore, connection of the new reinforcement to any existing reinforcement is normally not required.

For soft subgrades, where a mud wave is anticipated, construction should be parallel to the alignment with the outside fill placed in advance of the fill adjacent to the existing embankment. For firm subgrades, with no mudwave, fill may be placed outward, perpendicular to the alignment.

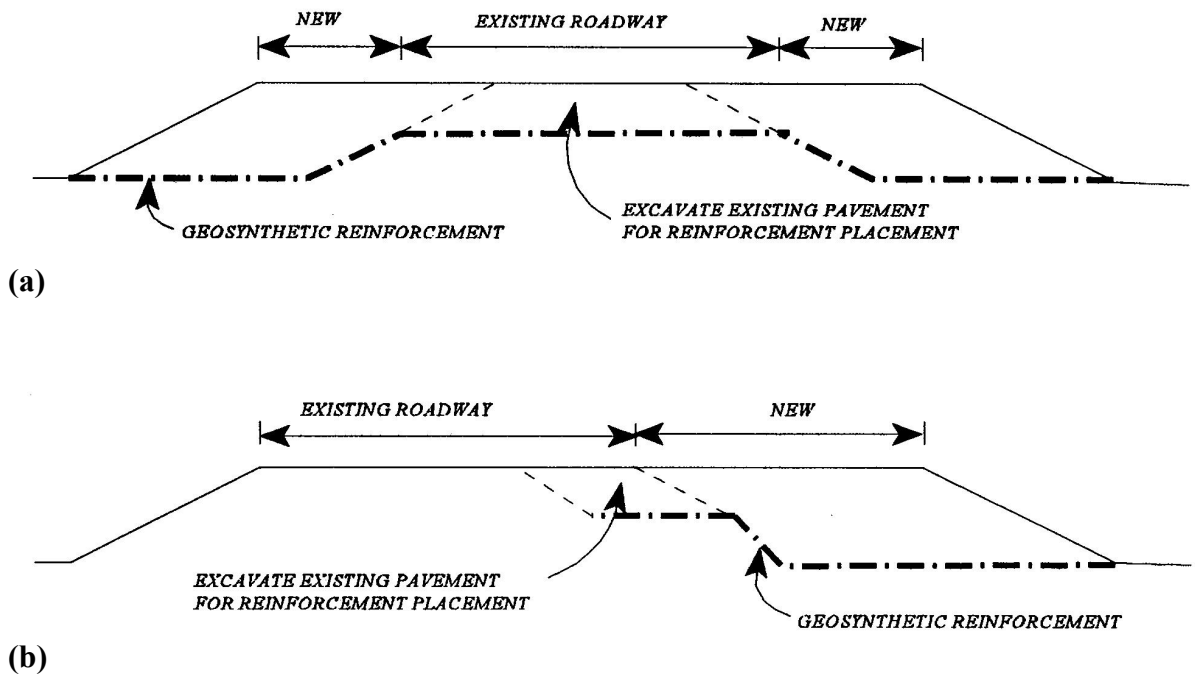

Figure 7-11. Reinforced embankment construction for roadway widening; a) fill placement on both sides of existing embankment; b) fill placement on one side of the existing fill.

7.11 REINFORCEMENT OF EMBANKMENTS COVERING LARGE AREAS

Special considerations are required for constructing large reinforced areas, such as parking lots, toll plazas, storage yards for maintenance materials and equipment, and construction pads. Loads are more biaxial than conventional highway embankments, and design strengths and strain considerations must be the same in all directions. Analytical techniques for geosynthetic reinforcement requirements are the same as those discussed in Section 7.3. Because geosynthetic strength requirements will be the same in both directions, including across the seams, special seaming techniques must often be considered to meet required strength requirements. Ends of rolls may also require butt seaming. In this case, rolls of different lengths should be used to stagger the butt seams. Two layers of fabric should be considered, with the bottom layer seams laid in one direction, and the top layer seams laid perpendicular to the bottom layer. The layers should be separated by a minimum lift thickness, usually 12 in. (300 mm), soil layer.

For extremely soft subgrades, the construction sequence must be well planned to accommodate the formation and movement of mudwaves. Uncontained mudwaves moving outside of the construction can create stability problems at the edges of the embankment. It may be desirable to construct the fill in parallel embankment sections, then connect the embankments to cover the entire area. Another method staggers the embankment load by constructing a wide, low embankment with a higher embankment in the center. The outside low embankments are constructed first and act as berms for the center construction. Next, an adjacent low embankment is constructed from the outside into the existing embankment; then the central high embankment is spread over the internal adjacent low embankment. Other construction schemes can be considered depending on the specific design requirements. In all cases, a perimeter berm system is necessary to contain the mudwave.

7.12 COLUMN SUPPORTED EMBANKMENTS

An alternate approach of embankment construction on soft soils may be used when time constraints are critical to the success of the project. Column supported embankments (CSE) with a geosynthetic reinforced load transfer platform are designed to transfer the load of the embankment through the soft compressible soil layer to a firm foundation, thus eliminating the construction wait time for dissipation of pore water pressures and minimizing settlement of the foundation soils. This technology was first used in Sweden in 1971, and has been used successfully on projects in the U.S. since 1994.

The load from the embankment must be effectively transferred to the columns to prevent punching of the columns through the embankment fill causing differential settlement at the surface of the embankment. If the columns are placed close enough together, soil arching will occur and the load will be transferred to the columns. A "conventional" CSE is where the columns are spaced relatively close together, and some battered columns are used at the sides of the embankment to prevent lateral spreading. In order to minimize the number of columns required to support the embankment and increase the efficiency of the design, a geosynthetic reinforced load transfer platform (LTP) may be used. The load transfer platform consists of one or more layers of geosynthetic reinforcement placed between the top of the columns and the bottom of the embankment. A CSE with geosynthetic reinforcement is schematically shown in Figure 7-12.

The key advantage to CSE is that construction may proceed rapidly in one stage. One major benefit of CSE technology is that it is not limited to any one-column type. Where the infrastructure precludes high-vibration techniques, the type of column used for the CSE system may be selected to minimize or eliminate the potential for vibrations. If contaminated soils are anticipated at a site, the column type may be selected so that there are no spoils from the installation process. The designer has the flexibility of selection of the most appropriate column for the project. Total and differential settlement of the embankment may be drastically reduced when using CSE over conventional approaches. A potential disadvantage of CSE is often initial construction cost when compared to other solutions. However, if the time savings when using CSE technology is included in the economic analysis, the cost may be far less than other solutions.

Design procedures and recommendations are presented in FHWA NHI-06-020, Ground Improvement Methods – Volume II (Elias et al., 2006) – the reference manual used with the 3-day NHI Ground Improvement Course #132034. There are two basic design approaches. One approach models the geosynthetic as a catenary and assumes: one layer of geosynthetic reinforcement is used; soil arch forms in the embankment; and the reinforcement is deformed during loading. The other approach uses a beam theory model and assumes: a minimum of three layers of geosynthetic reinforcement; vertical spacing between reinforcements of 8 to 18 in. (20 0 – 450 mm); granular fill platform thickness $\geq$ one-half the clear span between columns; and soil arch fully develops within the height of platform.

Applications where CSE technology is appropriate for transportation include

- embankment stabilization
- roadway widening
- bridge approach fill stabilization
- bridge abutment and other foundation support

A considerable amount of highway widening and reconstruction work will be required in future years. Some of this work will involve building additional lanes immediately adjacent to existing highways constructed on moderate to high fills over soft cohesive soils, such as those found in wetland areas. For this application, differential settlement between the existing and new construction is an important consideration, in addition to embankment stability. Support of the new fill on CSE offers a viable design alternative to conventional construction.

CSE may be used whenever an embankment must be constructed on soft compressible soil. To date, the technology has been limited to embankment heights in the range of 33 feet (10 m). CSE technology reduces post construction settlements of the embankment surface to typically less than 2 to 4 in. (50 to 100 mm). A generalized summary of the factors that should be considered when assessing the feasibility of utilizing CSE technology on a project is presented in FHWA NHI-06-020, Ground Improvement Methods Reference Manual – Volume II.

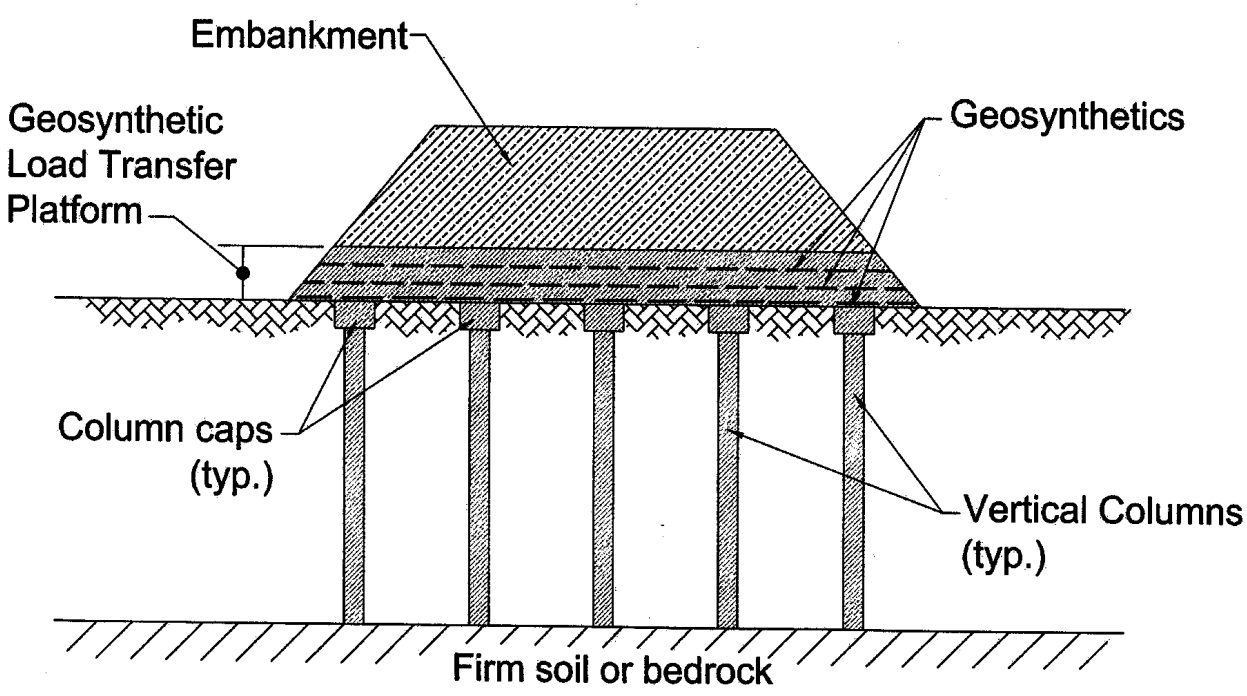

Figure 7-12. Column supported embankment with geosynthetic reinforcement.

7.13 REFERENCES

AASHTO, *Standard Specifications for Geotextiles - M 288* (2006). Standard Specifications for Transportation Materials and Methods of Sampling and Testing, 26th Edition, American Association of State Transportation and Highway Officials, Washington, D.C.,

ASTM, Annual Books of ASTM Standards, (2006). Volume 4.13 Geosynthetics, American International, West Conshohocken, Pennsylvania.

Bell, J.R. (1980). Design Criteria for Selected Geotextile Installations, *Proceedings of the 1st Canadian Symposium on Geotextiles*, pp. 35-37.

Bonaparte, R. and Christopher, B.R. (1987). Design and Construction of Reinforced Embankments Over Weak Foundations, *Proceedings of the Symposium on Reinforced Layered Systems*, Transportation Research Record 1153, Transportation Research Board, Washington, D.C., pp. 26-39.

Bonaparte, R., Holtz, R.R. and Giroud, J.P. (1985). *Soil Reinforcement Design Using Geotextiles and Geogrids*, Geotextile Testing and The Design Engineer, J.E. Fluet, Jr., Editor, ASTM STP 952, 1987, Proceedings of a Symposium held in Los Angeles, CA, July 1985, pp. 69-118.

Cheney, R.S. and Chassie, R.G. (1993). Soils and Foundations Workshop Manual, HI-88-099, 395 p.

Christopher, B.R. and Holtz, R.D. (1985). Geotextile Engineering Manual, FHWA-TS-86/203, 1044 p.

Christopher, B.R. and Holtz, R.D. (1989). Geotextile Design and Construction Guidelines, FHWA-HI-90-001, 297 p.

Dunnicliff, J. (1998). Geotechnical Instrumentation; FHWA HI-98-034; NHI course No. 132041 reference manual; 238 pp.

Elias, V., Welsh, J., Warren, J., Lukas, R., Collin, J.G. and Berg, R.R. (2006). Ground Improvement Methods; FHWA NHI-06-019 Volume I and NHI-06-020 Volume II; NHI course No. 132034 reference manual; 536 p and 520 p.

Fowler, J. (1981). Design, Construction and Analysis of Fabric-Reinforced Embankment Test Section at Pinto Pass, Mobile, Alabama, Technical Report EL-81-7, USAE Waterways Experiment Station, 238 p.

Fowler, J. and Haliburton, T.A. (1980). Design and Construction of Fabric Reinforced Embankments, *The Use of Geotextiles for Soil Improvement*, Preprint 80-177, ASCE Convention, pp. 89-118.

Haliburton T.A., Lawmaster, J.D. and McGuffey, V.E. (1982). *Use of Engineering Fabrics in Transportation Related Applications*, Final Report Under Contract No. DTFH61-80-C-0094.

Haliburton, T.A., Anglin, C.C. and Lawmaster, J.D. (1978a). *Testing of Geotechnical Fabric for Use as Reinforcement*, Geotechnical Testing Journal, American Society for Testing and Materials, Vol. 1, No. 4, pp. 203-212.

Haliburton, T.A., Anglin, C.C. and Lawmaster, J.D. (1978b). *Selection of Geotechnical Fabrics for Embankment Reinforcement*, Report to U.S. Army Engineer District, Mobile, Oklahoma State University, Stillwater, 138p.

Haliburton, T.A., Douglas, P.A. and Fowler, J. (1977). *Feasibility of Pinto Island as a Long-Term Dredged Material Disposal Site*, Miscellaneous Paper, D-77-3, U.S. Army Waterways Experiment Station.

Hird, C.C. and Jewell, R.A. (1990). *Theory of Reinforced Embankments*, Reinforced Embankments - Theory and Practice, Shercliff, D.A., Ed., Thomas Telford Ltd., London, UK, pp. 117-142.

Holtz, R.D. (1990). Design and Construction of Geosynthetically Reinforced Embankments on Very Soft Soils, State-of-the-Art Paper, Session 5, Performance of Reinforced Soil Structure, *Proceedings of the International Reinforced Soil Conference*, Glasgow, British Geotechnical Society, pp. 391-402.

Holtz, R.D. (1989). *Treatment of Problem Foundations for Highway Embankments*, Synthesis of Highway Practice 147, National Cooperative Highway Research Program, Transportation Research Board, Washington, D.C., 72p.

Humphrey, D.N. and Rowe, R.K. (1991). *Design of Reinforced Embankments - Recent Developments in the State of the Art*, Geotechnical Engineering Congress 1991, McLean, F., Campbell, D.A. and Harris, D.W., Eds., ASCE Geotechnical Special Publication No. 27, Vol. 2, June, pp. 1006-1020.

Humphrey, D.N. and Holtz, R.D. (1989). Effects of a Surface Crust on Reinforced Embankment Design, *Proceedings of Geosynthetics '89*, Industrial Fabrics Association International, St. Paul, MN, Vol. 1, pp. 136-147.

Humphrey, D.N. (1987). Discussion of Current Design Methods by R.M. Koerner, B-L Hwu and M.H. Wayne, Geotextiles and Geomembranes, Vol. 6, No. 1, pp. 89-92.

Humphrey, D.N. and Holtz, R.D. (1987). Use of Reinforcement for Embankment Widening, *Proceedings of Geosynthetics '87*, Industrial Fabrics Association International, St. Paul, MN, Vol. 1, pp. 278-288.

Humphrey, D.N. and Holtz, R.D. (1986). *Reinforced Embankments - A Review of Case Histories*, Geotextiles and Geomembranes, Vol. 4, No. 2, pp.129-144.

Jewell, R.A. (1988). *The Mechanics of Reinforced Embankments on Soft Soils*, Geotextiles and Geomembranes, Vol. 7, No. 4, pp.237-273.

Jürgenson, L. (1934). *The Shearing Resistance of Soils*, Journal of the Boston Society of Civil Engineers. Also in Contribution to Soil Mechanics, 1925-1940, BSCE, pp. 134-217.

Koerner, R.M., Editor (1990). *The Seaming of Geosynthetics*, Special Issue, Geotextiles and Geomembranes, Vol. 9, Nos. 4-6, pp. 281-564.

Ladd, C.C. (1991). *Stability Evaluation During Staged Construction*, 22nd Terzaghi Lecture, Journal of Geotechnical Engineering, American Society of Civil Engineers, Vol. 117, No. 4, pp. 537-615.

Leshchinsky, D. (1987). *Short-Term Stability of Reinforced Embankment over Clayey Foundation*, Soils and Foundations, The Japanese Society of Soil Mechanics and Foundation Engineering, Vol. 27, No. 3, pp. 43-57.

Mayne, P.W., Christopher, B.R. and DeJong, J. (2002). Subsurface Investigations – Geotechnical Site Characterization, FHWA NHI-01-031, NHI course No. 132031 reference manual, 300 pp.

McGown, A., Andrawes, K.Z., and Kabir, M.H. (1982). Load-Extension Testing of Geotextiles Confined in Soil, *Proceedings of the Second International Conference on Geotextiles*, Las Vegas, Vol. 3, pp. 793-798.

Perloff, W.H. and Baron, W. (1976). Soil Mechanics: Principles and Applications, Ronald, 745 p.

Rowe, R.K. and Mylleville, B.L.J. (1990). Implications of Adopting an Allowable Geosynthetic Strain in Estimating Stability, *Proceedings of the 4th International Conference on Geotextiles, Geomembranes, and Related Products*, The Hague, Vol. 1, pp. 131-136.

Rowe, R.K. and Mylleville, B.L.J. (1989). Consideration of Strain in the Design of Reinforced Embankments, *Proceedings of Geosynthetics '89*, Industrial Fabrics Association International, St. Paul, MN, Vol. 1, pp. 124-135.

Rowe, R.K. and Soderman, K.L. (1987a). Reinforcement of Embankments on Soils Whose Strength Increases With Depth, *Proceedings of Geosynthetics '87*, Industrial Fabrics Association International, St. Paul, MN, Vol. 1, pp. 266-277.

Rowe, R.K. and Soderman, K.L. (1987b). *Stabilization of Very Soft Soils Using High Strength Geosynthetics: The Role of Finite Element Analyses*, Geotextiles and Geomembranes, Vol. 6, No. 1, pp. 53-80.

Sabatini, P.J., Bachus, R.C., Mayne, P.W., Schneider, J.A. and Zettler, T.E. (2002). GEC No. 5 – Evaluation of Soil and Rock Properties, Geotechnical Engineering Circular No. 5, FHWA IF-02-034, 385 pp.

Samtani, N.C. and Nowatzki, E.A. (2006). Soils and Foundations Workshop Reference Manual, FHWA NHI-06-088, NHI course No. 132012 reference manual.

Silvestri, V. (1983). *The Bearing Capacity of Dykes and Fills Founded on Soft Soils of Limited Thickness*, Canadian Geotechnical Journal, Vol. 20, No. 3, pp. 428-436.

Tan, S.L. (1990). *Stress-Deflection Characteristics of Soft Soils Overlain with Geosynthetics*, MSCE Thesis, University of Washington, 146 p.

Terzaghi, K. and Peck, R.B. (1967). Soil Mechanics in Engineering Practice, 2nd Edition, John Wiley & Sons, New York, 729 p.

U.S. Department of the Navy (1986). *Foundations and Earth Structures*, Design Manual 7.2, Naval Facilities Engineering Command, Alexandria, VA, (can be downloaded from http://www.geotechlinks.com)

Vesic, A.A. (1975). *Bearing Capacity of Shallow Foundations*, Chapter 3 in Foundation Engineering Handbook, Winterkorn and Fang, Editors, Van Nostrand Reinhold, pp. 121-147.

Washington State Department of Transportation (1997). High Strength Geotextile for Embankment Reinforcement.

Wager, O. (1981). Building of a Site Road over a Bog at Kilanda, Alvsborg County, Sweden in Preparation for Erection of Three 400kV Power Lines, Report to the Swedish State Power Board, AB Fodervävnader, Borå, Sweden, 16p.